TECHNICAL MANUAL

DIRECT AND GENERAL SUPPORT MAINTENANCE REPAIR PARTS AND SPECIAL TOOLS LIST (INCLUDING DEPOT MAINTENANCE REPAIR PARTS AND SPECIAL T

LOADER, SCOOP TYPE: PNEU-TIRED, DIESEL ENGINE DRIVEN; HINGED FRAME STEER, WITH 2 1/2 CUBIC YARD MULTI-PURPOSE BUCKET (ALLIS-CHALMERS MODEL 645M)

FSN 3805-051-9359

This copy is a reprint which includes current pages from Changes 1 THROUGH 2

HEADQUARTERS, DEPARTMENT OF THE A

CHANGE NO. 2

HEADQUARTERS
DEPARTMENT OF THE
WASHINGTON, D.C., *15 June*

DIRECT AND GENERAL SUPPORT AND DEPOT MAINTENANCE REPAIR PARTS AND SPECIAL TOOLS LIST (INCLUDING DEPOT AND MAINTENANCE REPAIR PARTS AND SPECIAL TOOLS) LOADER, SCOOP TYPE: PNEU-TIRED, DIESEL ENGINE DRIVEN; HINGED FRAME STEER, WITH 2 1/2 CUBIC YARD MULTI-PURPOSE BUCKET (ALLIS-CHALMERS MODEL 645M) (NSN 3805-00-051-9359)

TM 5-3805-239-34P, 30 Aug 1974 is changed as follows:

1. Remove old pages and insert new pages as indicated below.
2. New or changed material is indicated by a vertical bar in the margin of the page.
3. Added or revised illustrations are indicated by a vertical bar adjacent to the illustration identification number.

Remove Pages	*Insert Pages*
1 and 2	1 and 2
15 and 16	15 through 16.1 (16.2 blank)
19 and 20	19 and 20
25 and 26	25 and 26
39 and 40	39 and 40
43 and 44	43 and 44
51 and 52	51 and 52
65 and 66	65 and 66
	106.1 through 106.3 (106.4 blank)
147 through 150	147 through 150
219 through 226	219 through 226
233 through 236	233 through 236
239 and 240	239 and 240
243 through 248	243 through 248
Authentication Page	

4. File this change sheet in front of the publication for reference purposes.

By Order of the Secretary of the Army:

JOHN A. WICKHAM
General, United States
Chief of Staff

Official:

ROBERT M. JOYCE
Major General, United States Army
The Adjutant General

Distribution:
To be distributed in accordance with DA Form 12-25R, Direct and General Support maintenance

CHANGE
NO. 1

HEADQUARTERS
DEPARTMENT OF THE ARMY
WASHINGTON, D.C., 25 February

Direct and General Support and Depot Maintenance Repair Parts and Special Tools List (Including Depot and Maintenance Repair Parts and Special Tools)

LOADER, SCOOP TYPE: PNEU-TIRED, DIESEL ENGINE DRIVEN; HINGED FRAME STEER, WITH 2½ CUBIC YARD MULTI-PURPOSE BUCKET (ALLIS-CHALMERS MODEL 645M) NSN 3805-00-051-9359

Current as of 15 September 1981

TM 5-3805-239-34P, 30 August 1974, is changed as follows:

1. Remove old pages and insert new pages as indicated below. New or changed material is indicated by a vertical the outer margin of the page. Added or changed illustrations are indicated by a vertical bar adjacent to the illust identification number. Additions or changes to the repair parts listing is indicated by an action change code.

Remove pages	*Insert pages*
vii	vii/(viii blank)
1 and 2	1 and 2
7 through 10	7 through 10
13 and 14	13 and 14
19 through 26	19 through 26
31 through 44	31 through 44
53 and 54	53 and 54
57 and 58	57 and 58
61 through 64	61 through 64
67 through 74	67 through 74
145 and 146	145 and 146
203 and 204	203 and 204
217 through 246	217 through 248
247 and authentication	authentication/(blank)

By Order of the Secretary of the Army:

E. C. MEYER
General, United States Arm
Chief of Staff

Official:

ROBERT M. JOYCE
Brigadier General, United States Army
The Adjutant General

Distribution:

To be distributed in accordance with DA Form 12-25B, Direct and General Support maintenance requirements fo
Loaders.

Technical Manual
No. 5-3805-239-34P

HEADQUARTERS
DEPARTMENT OF THE AI
Washington, D.C., *30 August*

DIRECT AND GENERAL SUPPORT MAINTENANCE REPAIR PARTS AND SPECIAL TOOLS LIST (INCLUDING DEPOT MAINTENANCE REPAIR PARTS AND SPECIAL TOOLS)

LOADER, SCOOP TYPE: PNEU-TIRED, DIESEL ENGINE DRIVEN; HINGED FRAME STEER, WITH 2 1/2 CUBIC YARD MULTI-PURPOSE BUCKET (ALLIS-CHALMERS MODEL 645M) FSN 3805-051-9359

Current as of 28 June 1974

			Page
Section	I.	INTRODUCTION	v
	II.	REPAIR PARTS LIST	1
Group	01.	Bucket, Boom and Link Unit	1
		Bucket	79
		Pivot pin and bearing retainer	80
		Boom and link unit	81
	02.	Bucket and Boom Hydraulic Lines and Hydraulic Reservoir	2
		Bucket hydraulic lines	82
		Cross frame hydraulic lines	83
		Hydraulic lines	84
		Valve to cross frame hydraulic lines	85
		Demand and control valve, hydraulic lines	86
		Hydraulic pump lines	87
		Hydraulic tank and lines	88
	03.	Bucket and Boom Cylinders	6
		Lift cylinder indicator	89
		Dump cylinder	90
		Lift cylinder	91
		Clam cylinder	92
	04.	Bucket and Boom Hydraulic Control Valve, Controls and Main Hydraulic Pump	9
		Hydraulic controls	93
		Hydraulic control valve and mtg bracket	94
		Hydraulic control valve	95
		Demand valve and mtg hardware	96
		Demand valve	97
		Clam relief valve	98
		Hydraulic pump and mounting hardware	98
		Main hydraulic pump	99
	05.	Lights	14
		Blackout taillight	100
		Stop and taillight	101
		Blackout light	102
		Headlight and taillight	103
		Turn signal switch	104
		Horn	105
		Batteries, cables, and box	106

*This manual supersedes TM 5-3805-239-35P, 13 December 1968, including all changes.

		Page	Figure
06.	Hood, Panels, Seat, Tool Box	16	
	Hood and fenders	107	30
	Ladder and handrail	108	31
	Tool box	109	32
	Seat	110	33
	Platform and covers	111	34
	Reflector	112	35
07.	Radiator, Guards, and Hoses	20	36
08.	Engine Assembly	21	
	Engine and mounting	114	37
09.	Air Cleaner and Turbocharger	20	
	Air cleaner and indicator	115	38
	Air cleaner	116	39
	Turbocharger mounting and lines	117	40
	Turbocharger	118	41
10.	Oil Filter and Oil Cooler	22	
	Oil filter	119	42
	Oil cooler	120	43
11.	Fuel System	24	
	Fuel filter, primer and lines	121	44
	Fuel filter	122	45
	Priming system	123	46
	Fuel injection lines	124	47
	Fuel injector	125	48
	Fuel injection pump and drive	126	49
	Fuel injection pump throttle lever & governor control	127	50
	Fuel injection pump automatic advance	128	51
	Fuel injection pump hydraulic head and governor	129	52
12.	Fan, Water Pump and Thermostat	31	
	Fan and pulley	130	53
	Water pump and inlet pipe	131	54
	Water pump	132	55
	Thermostat and housing	133	56
13.	Alternator and Starting Motor	32	
	Alternator and mounting	134	57
	Alternator	135	58
	Regulator	136	59
	Starter	137	60
	Starter solenoid and brush plate	138	61
	Starter drive end and armature	139	62
14.	Manifolds	36	
	Exhaust manifold	140	63
	Intake manifold	141	64
15.	Oil Pan and Oil Pump	36	
	Oil pan	142	65
	Oil pump and lines	143	66
	Oil pump	144	67
16.	Flywheel and Housing	37	
	Flywheel housing and oil seal	145	68
	Flywheel and ring gear	146	69
17.	Cylinder Head and Valves	38	
	Cylinder head, valves and cover	147	70
18.	Pistons, Connecting Rods and Crankshaft	39	
	Piston, sleeve and connecting rod	148	71
	Camshaft	149	72
19.	Camshaft and Rocker Arms	39	
	Timing gear cover and support plate	150	73
	Idler gear	151	74
	Rocker arm and camshaft	152	75
20.	Cylinder Block	41	76
21.	Fuel Tank	42	77
22.	Throttle Control	42	78
23.	Instrument Panel, Gages, Lights and Switches	43	79
	Instrument panel and gages	156	79
	Hourmeter	157	80
	Starting switch, solenoid and pressure switch	158	81
	Slave receptacle, polarity protector, resistor and circuit breaker	159	82

			Page
Group	24.	Air Compressor	45
		Air compressor and lines	160
		Compressor head and valves	161
		Compressor block and piston	162
		Crankshaft and housing	163
		Governor mounting	164
		Governor	165
	25.	Steering Gear and Tie Rod	48
		Steering wheel	166
		Steering gear	167
		Tie rod	168
	26.	Steering Cylinder, Valves and Pump	50
		Steering cylinder and lines	169
		Steering cylinder	170
		Steering pump	171
	27.	Propeller Shafts	52
		Rear drive shaft	172
		Front drive shaft	173
		Center drive shaft	174
		Center bearing & support	175
	28.	Transmission Oil Filter, Lines and Fittings	53
		Transmission oil lines and fittings	176
		Transmission oil filter	177
	29.	Transmission Assembly, Controls and Torque Converter	54
		Transmission controls	178
		Torque converter disc	179
		Torque converter turbines	180
		Torque converter housing and drive gears	181
		Drive gears and flywheel unit	182
		Accessory drive gear	183
		Direct drive clutch and transfer drive gear	184
		Forward clutch and planetary	185
		Reverse clutch and planetary	186
		Output shaft	187
		Charging pump	188
		Selector valve	189
		Transmission housing and covers	190
	30.	Parking Brake and Lever	61
		Parking brake control	191
		Parking brake	192
	31.	Wheel and Tire	61
		Wheel & tire	193
	32.	Brake System	62
		Front and rear power cluster and lines	194
		Front power cluster	195
		Rear power cluster	196
		Air receiver and lines	197
		Alcohol injector and lines	198
		Wheel brake lines and clutch cut-off valve	199
		Clutch cut-off valve	200
		Treadle valve connecting pedal	201
		Treadle valve	202
		Front service brakes	203
		Rear service brakes	204
		Wheel cylinder mounting	205
		Rear wheel cylinder	206
		Front wheel cylinder	207
	33.	Front and Rear Axle	71
		Front axle	208
		Front planetary drive unit	209
		Front differential	210
		Front axle housing	211
		Rear axle	212
		Rear planetary drive unit	213
		Rear differential	214
		Rear axle housing	215

			Page	Illus Fig
Group	34.	Main Frame	76	
		Pintle hook	216	13
		Main frame	217	14
	35.	Bulk Material	78	
Section	III.	SPECIAL TOOLS LIST (NOT APPLICABLE)		
	IV.	FEDERAL STOCK NUMBER AND REFERENCE NUMBER INDEX	218	

SECTION I.
INTRODUCTION

1. Scope

This manual lists repair parts, special tools, test, measurement, and diagnostic equipment (TMDE), and other support equipment required for direct support, and general support maintenance of the Loader, Scoop.

2. General

a. Section II — Repair Parts List. A list of repair parts authorized for use in the performance of maintenance. The list also includes parts which must be removed for replacement of the authorized parts. Parts lists are composed of functional groups in ascending numerical sequence, with the parts in each group listed in figure and item number sequence. Bulk materials are listed in FSN sequence, as the last group in Section II.

b. Section III — Special Tools List. (Not applicable).

c. Section IV — Federal Stock Number and Part Number Index. A list, in ascending numerical sequence, of all Federal stock numbers appearing in the listings, followed by a list, in alphanumeric sequence, of all part numbers appearing in the listings. Federal stock number and part numbers are cross-referenced to each illustration figure and item number appearance.

3. Explanation of Columns

The following provides an explanation of columns found in the tabular listings:

a. Illustration. This column is divided as follows:

(1) *Figure number.* Indicates the figure number of the illustration in which the item is shown.

(2) *Item number.* The number used to identify each item called out in the illustration.

b. Source, Maintenance, and Recoverability Codes (SMR).

(1) *Source code.* Source codes are assigned to support items to indicate the manner of acquiring support items for maintenance, repair, or overhaul of end items. Source codes are entered in the first and second positions of the Uniform SMR Code format as follows:

Code	*Definition*
PA	Item procured and stocked for anticipated or known usage.
PB	Item procured and stocked for insurance purpose because essentiality dictates that a minimum quantity be available in the supply systems.
PC	Item procured and stocked and which otherwise would be coded PA except that it is deteriorative in nature.
PD	Support item, excluding support equipment, procured initial issue or outfitting and stocked only for subseq or additional initial issues or outfittings. Not subje automatic replenishment.
PE	Support equipment procured and stocked for initial issu outfitting to specified maintenance repair activities
PF	Support equipment which will not be stocked but which be centrally procured on demand.
PG	Item procured and stocked to provide for sustained su for the life of the equipment. It is applied to an peculiar to the equipment which, because of prol discontinuance or shutdown of production facilities, w prove uneconomical to reproduce at a later time.
KD	An item of a depot overhaul/repair kit and not purch separately. Depot kit defined as a kit that provides i required at the time of overhaul or repair.
KF	An item of a maintenance kit and not purchased separa Maintenance kit defined as a kit that provides an item can be replaced at organizational or intermediate lev maintenance.
KB	Item included in both a depot overhaul/repair kit and a r tenance kit.
MO	Item to be manufactured or fabricated at organizat level.
MF	Item to be manufactured or fabricated at the direct su maintenance level.
MH	Item to be manufactured or fabricated at the general su maintenance level.
MD	Item to be manufactured or fabricated at the depot r tenance level.
AO	Item to be assembled at organizational level.
AF	Item to be assembled at direct support maintenance l
AH	Item to be assembled at general support maintenance
AD	Item to be assembled at depot maintenance level.
XA	Item is not procured or stocked because the requiremen the item will result in the replacement of the next h assembly.
XB	Item is not procured or stocked. If not available th salvage, requisition.
XD	A support item that is not stocked. When required, iten be procured through normal supply channels.

NOTE

Cannibalization or salvage may be used as a source of supply for any items source coded above except those coded XA or XD.

(2) *Maintenance code.* Maintenance codes assigned to indicate the levels of mainten authorized to use and repair support items. maintenance codes are entered in the third fourth positions of the Uniform SMR Code forma follows:

(*a*) The maintenance code entered in the t position will indicate the lowest maintenance l authorized to remove, replace, and use the sup item. The maintenance code entered in the t position will indicate one of the following leve maintenance:

Code	Application/Explanation
C	Crew or operator maintenance performed within organizational maintenance.
O	Support item is removed, replaced, used at the organizational level.
I	Support item is removed, replaced, used by the direct support element of integrated direct support maintenance.
F	Support item is removed, replaced, used at the direct support level.
H	Support item is removed, replaced, used at the general support level.
D	Support items that are removed, replaced, used at depot, mobile depot, specialized repair activity only.

NOTE

Codes "I" and "F" will be considered the same by direct support units.

(*b*) The maintenance code entered in the fourth position indicates whether the item is to be repaired and identifies the lowest maintenance level with the capability to perform complete repair (i.e., all authorized maintenance functions). This position will contain one of the following maintenance codes:

Code	Application/Explanation
O	The lowest maintenance level capable of complete repair of the support item is the organizational level.
F	The lowest maintenance level capable of complete repair of the support item is the direct support level.
H	The lowest maintenance level capable of complete repair of the support item is the general support level.
D	The lowest maintenance level capable of complete repair of the support item is the depot level.
L	Repair restricted to designated specialized repair activity.
Z	Nonreparable. No repair is authorized.
B	No repair is authorized. The item may be reconditioned by adjusting, lubricating, etc., at the user level. No parts or special tools are procured for the maintenance of this item.

(3) *Recoverability code.* Recoverability codes are assigned to support items to indicate the disposition action or unserviceable items. The recoverability code is entered in the fifth position of the Uniform SMR Code format as follows:

Recoverability Codes	Definition
Z	Nonreparable item. When unserviceable, condemn and dispose at the level indicated in position 3.
O	Reparable item. When uneconomically reparable, condemn and dispose at organizational level.
F	Reparable item. When uneconomically reparable, condemn and dispose at the direct support level.
H	Reparable item. When uneconomically reparable, condemn and dispose at the general support level.
D	Reparable item. When beyond lower level repair capability, return to depot. Condemnation and disposal not authorized below depot level.
L	Reparable item. Repair, condemnation, and disposal not authorized below depot/specialized repair activity level.
A	Item requires special handling or condemnation procedures because of specific reasons (i.e., precious metal content, high dollar value, critical material or hazardous material). Refer to appropriate manuals/directives for specific instructions.

c. Federal Stock Number. Indicates the Federal stock number assigned to the item and will be used for requisitioning purposes.

d. Part Number. Indicates the primary number used by the manufacturer which controls the design and characteristics of the item by means of its engineering drawings, specifications standards, and inspection requirements to identify an item or range of items.

NOTE

When a stock numbered item is requisitioned, the repair part received may have a different part number than the part being replaced.

e. Federal Supply Code for Manufacturer (FSCM). The FSCM is a 5-digit numeric code listed in SB 708-42 which is used to identify the manufacturer, distributor, or Government agency, etc.

f. Description. Indicates the Federal item name and, a minimum description to identify the item. Items that are included in kits and sets are listed below the name of the kit or set with the quantity of each item in the kit or set indicated in the quantity incorporated in unit column. When the part to be used differs between serial numbers of the same model, usable on codes are shown as the last line of the description. In the Special Tools List, the initial basis of issue (BOI) appears as the last line in the entry for each special tool, TMDE, and support equipment. When density of equipments supported exceeds density spread indicated in the basis of issue, the total authorization is increased accordingly.

g. Unit of Measure (U/M). Indicates the standard of the basic quantity of the listed item as used in performing the actual maintenance function. This measure is expressed by a two-character alphabetical abbreviation (e.g., ea, in, pr, etc.). When the unit of measure differs from the unit of issue, the lowest unit of issue that will satisfy the required units of measure will be requisitioned.

h. Quantity Incorporated in Unit. Indicates the quantity of the item used in the breakout shown on the illustration figure, which is prepared for a functional group, subfunctional group, or an assembly. A "V" appearing in this column in lieu of a quantity indicates that no specific quantity is applicable, (e.g., shims, spacers, etc.).

4. Special Information

a. Detailed manufacturing instructions for items source coded to be manufactured or fabricated are found in TM 5-3805-239-12. Bulk materials required to manufacture items are listed in the Bulk Material Group of this manual.

b. Detailed assembly instructions for items source coded to be assembled are found in TM 5-3805-239-35. Assembly components are listed immediately following the item to be assembled.

c. Repair parts kits and gasket sets appear as the last entries in the repair parts listing for the figure

in which its parts are listed as repair parts or are listed at the end of the repair parts listing for the last figure containing parts of the kit.

d. The following publications pertain to the Loader, Scoop and its components.

TM 5-3805-239-12	Operator and Organizational Maintenance Manual
TM-5-3805-239-35	DS, GS, and Depot Maintenance Manual
LO 5-3805-239-12-1	Lubrication Order

e. (Applicable to revision and/or change only). Action change codes indicated in the left-hand margin of the listing page denote the following:

N — Indicates an added item
C — Indicates a change in data
R — Indicates a change in NSN only

5. How to Locate Repair Parts

a. When Federal Stock Number or Part Number is Unknown:

(1) Using the table of contents, determine the functional group within which the repair part belongs. This is necessary since illustrations are prepared for functional groups, and listings are divided into the same groups.

(2) Find the illustration covering the functional group to which the repair part belongs.

(3) Identify the repair part on the illustration and note the illustration figure and item number of the repair part.

(4) Using the Repair Parts Listing, find the figure and item number noted on the illustration.

b. When Federal Stock Number or Part Number is Known.

(1) Using the Index of Federal Stock Numbers and Part Numbers, find the pertinent Federal stock numl or part number. This index is in ascending FSN sequer followed by a list of part numbers in ascending alpha meric sequence, cross-referenced to the illustration fig number and item number.

(2) After finding the figure and item number, loc the figure and item number in the repair parts list.

6. Abbreviations

dia.....diame
hd .....he
hex.....hexag
id .....inside diame
lh.....left ha
mtg .....mounti
od.....outside diame
rh .....right ha
thd .....thre
thk.....th

7. Reporting Errors and Recommending Improvements

You can help improve this manual. If you find any m takes or if you know of a way to improve the procedur please let us know. Mail your letter or DA Form 20 (Recommended Changes to Publications and Bla Forms) direct to: Commander, US Army Tar Automotive Command, ATTN: DRSTA-MB, Warre MI 48090. A reply will be furnished to you.

(1) ILLUSTRATION (a) FIG NO.	(b) ITEM NO.	(2) SMR CODE	(3) NATIONAL STOCK NUMBER	(4) PART NUMBER	(5) FSCM	(6) DESCRIPTION USABLE ON CODE	UA
						SECTION II - REPAIR PARTS FOR DS, GS, AND DEPOT MAINTENANCE	
						GROUP 01 - BUCKET, BOOM AND LINK UNIT	
1	1	PAOZZ	5315-00-839-5822	MS24665-353	96906	PIN, COTTER: LOCK PIN	E
1	2	PAOZZ	5315-00-928-7125	10786	80194	PIN, STRAIGHT, HEADED: PIN LOCKING	E
1	3	PAOZZ	5315-00-932-0857	18633	80194	PIN, CLAM, CYLINDER, UPPER	E
1		A000H		58068	80194	BUCKET ASSEMBLY	E
1	4	PA00H	3805-00-470-6684	58066	80194	CLAM ASSEMBLY	E
1	5	XAOZZ		51902	80194	HINGE, CLAM	E
1	6	PAOZZ	3120-00-045-9358	23904	80194	BEARING, SLEEVE	E
1	7	PAOZZ	3805-00-066-8793	29561	80194	BLADE, BUCKET	E
1	8	PAOZZ	3805-00-927-4963	60722	80194	BLADE, CLAM	E
1	9	PA00H	3805-00-423-0848	58065	80194	MOLDBOARD ASSEMBLY	E
1	10	PAOZZ	5306-00-717-9637	916448-4	92392	BOLT, PLOW: MOLDBOARD MTG, 3/4-19 THD SIZE, 2 1/4 IN. LG	E
1	11	PAOZZ	3805-00-017-8003	209992	80194	BLADE, MOLDBOARD	E
1	12	PAOZZ	3805-00-017-7928	80476	80194	BIT, END: MOLDBOARD	E
1	13	PAOZZ	5310-00-115-6231	911030-5	92392	NUT, PLAIN, HEXAGON: MOLDBOARD MTG, 3/4-9 THD SIZE	E
1	14	PAOZZ	5310-00-763-8920	MS51967-20	96906	NUT, PLAIN, HEXAGON: SHANK MTG	E
1	15	PAOZZ	5305-00-207-2279	037332-4	92392	SCREW, CAP, HEXAGON HEAD: SHANK MTG, 5/8-11 THD SIZE, 3 IN. LG	E
1	16	PAOZZ	5305-00-252-5330	037851-3	92392	SCREW, CAP, HEXAGON HEAD: SHANK MTG, 5/8-11 THD SIZE, 3 1/4 IN. LG	E
1	17	PAOZZ		918245-2	92392	PIN, SPRING: TOOTH MTG	E
1	18	PAOZZ	3805-00-909-6587	204157	80194	TIP, TOOTH	E
1	19	PAOZZ	3805-00-999-5905	22929M1	80194	SHANK, TOOTH	E
1	20	PAOZZ		29582	80194	PIN, PIVOT, CLAMP	E
1	21	PAOZZ	4730-00-050-4208			FITTING, LUBRICATION	E
1	22	PAOZZ	5315-00-935-8995	46134	80194	PIN, CLAM CYLINDER, LOWER	E
1	23	PAOZZ	5315-00-930-6042	10815	80194	PIN, STRAIGHT, HEADED; CYLINDER PIN	E
2	1	PAOZZ	5315-00-115-6299	3044869-0	92392	PIN, PIVOT, DUMP CYLINDER	E
2	2	PAOZZ		3001559-8	92392	WASHER, FLAT; PIVOT PIN	E
2	3	PAOZZ		917835-1	92392	NUT, SELF-LOCKING; PIVOT PIN	E
2	4	PAOZZ	5310-00-265-9217	MS35690-825	96906	NUT, PLAIN, HEXAGON; BEARING RETAINER	E
2	5	PAOZZ	5310-00-584-5272	MS353348-10	96906	WASHER, LOCK: BEARING RETAINER	E
2	6	PAFZZ	3120-00-115-1399	3045472-2	92392	BEARING, SLEEVE; LIFT CYLINDER	E
2	7	XB0ZZ		3052172-8	92392	RETAINER BEARING	E
2	8	PAOZZ	5305-00-716-8181	MS90726-118	96906	SCREW, CAP, HEXAGON HEAD: BEARING RETAINER	E
2	9	PAOZZ	4730-00-172-0028	915274-5	92392	FITTING, LUBRICATION; BEARING	E
3	1	XB0ZZ		3050142-3	92392	LINK, CROSS	E
3	2	XB0ZZ		3050140-7	92392	LINK, CROSS	E
3	3	XB0ZZ		3050139-9	92392	LINK, CROSS	E
3	4	XB0ZZ		305141-5	92392	LINK, CROSS	E
3	5	XB0ZZ		3042772-8	92392	WASHER, SPACING: .0359 IN. THK	E
3	5	XB0Z7		3042772-6	92392	WASHER, SPACING: .059 IN. THK	E

(a) FIG NO.	(b) ITEM NO.	SMR CODE	NATIONAL STOCK NUMBER	PART NUMBER	FSCM	USABLE ON CODE	U/M	U/P
3	6	PAOZZ	5310-00-400-8504	917835-1	92392	NUT, PLAIN, HEXAGON: PIVOT PIN	EA	
3	7	XBOZZ		3001559-8	92392	WASHER: PIVOT PIN	EA	
3	8	PAFZZ	3120-00-116-1464	3045042-3	92392	BEARING, SLEEVE: BOOM AND LINK	EA	
3	9	PAOZZ		205000	36251	FITTING, LUBRICATION	EA	
3	10	PAOZZ		3045055-5	92392	PIN, PIVOT	EA	
3	11	XBFZZ	2950-00-236-9938	3050993-9	92392	BOOM ASSEMBLY	EA	
3	12	PAOZZ	5315-00-115-1489	3050040-9	92392	PIN, PIVOT, BOOM	EA	
3	13	PAFZZ	3120-00-115-1392	3010347-7	92392	BEARING, SLEEVE; BOOM	EA	
3	14	XBOZZ		3044963-1	92392	WASHER; PIVOT PIN	EA	
3	15	PAOZZ		924130-8	92392	NUT, LOCKING: PIVOT PIN	EA	
3	16	PAOZZ	4730-00-050-4208	924178-7	92392	FITTING, LUBRICATION; BOOM	EA	
3	17	PAFZZ	5315-00-229-3617	3011625-5	92392	PIN, LOCKING: PIVOT PIN	EA	
3	18	PAFZZ		900811-1	92392	PIN, COTTER: LOCK PIN	EA	
3	19	PAOZZ	5315-00-115-1487	3045107-4	92392	PIN, PIVOT, BOOM CYLINDER	EA	
3	20	PAOZZ	5315-00-115-1498	3045059-5	92392	PIN, LINK TO BUCKET	EA	
3	21	XBOZZ	3805-00-139-4353	3050174-6	92392	LINK ASSEMBLY, DUMP	EA	
3	22	PAFZZ	3120-00-116-1464	3045042-3	92392	BEARING, SLEEVE	EA	
						GROUP 02 - BUCKET AND BOOM HYDRAULIC LINES, AND HYDRAULIC RESERVOIR		
4	1	PCOZZ	4720-00-115-0248	8710	80194	HOSE ASSEMBLY: CLAM CYLINDER	EA	
4	2	PAOZZ		64754	80194	CLAMP; CROSS TANK	EA	
4	3	PAOZZ		MS35690-605	96906	NUT, PLAIN, HEXAGON: TUBE CLAMP, 3/8 IN. NC	EA	
4	4	PAOZZ		211548	80194	TUBE ASSEMBLY: VERTICAL, LEFT SIDE	EA	
4	5	PAOZZ	4730-00-231-3016	920751-5	92392	ELBOW, PIPE TO TUBE: VERTICAL TUBES	EA	
4	6	PAOZZ		26463	80194	TUBE ASSEMBLY, HORIZONTAL	EA	
C 4	7	PAOZZ		211549	80194	HOSE ASSEMBLY: BOOM TO BUCKET	EA	
4	8	PAOZZ	4710-00-401-9417	211547	80194	TUBE ASSEMBLY: VERTICAL, RIGHT SIDE	EA	
5	1	MOOOO		3050849-3	92392	HOSE ASSEMBLY: TO DUMP CYLINDER MANUFACTURE FROM:	EA	
5	1	PAOZZ	4730-00-203-3551			FITTING, 1 REQUIRED	EA	
5	1	PAOZZ	4730-00-738-7543			FITTING, 1 REQUIRED	EA	
5	1	PCOZZ	4720-00-639-9899			HOSE, 36 INCHES REQUIRED	EA	
5	2	PAOZZ	3830-00-852-5887	921116-0	92392	FLANGE, SPLIT; HOSE AND TUBE MTG	EA	
5	3	PCOZZ	5330-00-110-5685	923718-1	92392	PACKING, PREFORMED; SPLIT FLANGE	EA	
5	4	PAOZZ		MS35301-62	96906	SCREW, CAP, HEXAGON HEAD: SPLIT FLANGE MTG	EA	
5	5	PAOZZ	5310-00-637-9541			WASHER, LOCK: SPLIT FLANGE AND CLAMP MTG	EA	
5	6	PAOZZ		MS90726-68	96906	SCREW, CAP, HEXAGON HEAD: CLAMP MTG	EA	
5	7	PAOZZ		MS35691-625	96906	NUT, PLAIN, HEXAGON: CLAMP MTG	EA	
5	8	XBOZZ		3044134-9	92392	CLAMP: CROSS TUBE	EA	
5	9	PAOZZ	4710-00-168-1850	3044155-4	92392	TUBE ASSEMBLY: CROSS FRAME	EA	
5	10	PAOZZ	4710-00-168-1845	3044154-7	92392	TUBE ASSEMBLY: CROSS FRAME	EA	

	(1) ILLUSTRATION (a) FIG NO.	(b) ITEM NO.	(2) SMR CODE	(3) FEDERAL STOCK NUMBER	(4) PART NUMBER	(5) FSCM	(6) DESCRIPTION USABLE ON CODE
C	5	11	PAOZZ	4710-168-1851	3044112-5	92392	TUBE ASSEMBLY: CROSS FRAME
C	5	12	PAOZZ	4710-168-1819	3050841-0	92392	TUBE ASSEMBLY: TO DUMP CYLINDER
C	5	13	PAOZZ	4710-168-1844	3050842-8	92392	TUBE ASSEMBLY: TO DUMP CYLINDER
	5	14	PAOZZ	4710-168-1844	3050842-8	92392	TUBE ASSEMBLY: TO DUMP CYLINDER
C	5	15	XBOZZ		3050808-9	92392	CLAMP: TUBE MTG
C	5	16	PAOZZ	5305-269-2814	MS90726-70	96906	SCREW, CAP, HEXAGON HEAD: CLAMP MTG
C	5	17	PAOZZ	5305-226-7768	MS90726-115	96906	SCREW, CAP, HEXAGON HEAD: BRACKET MTG
C	5	18	PAOZZ	5310-877-5795	503322	00000	NUT, SELF-LOCKING, HEXAGON: BRACKET MTG
C	5	19	XBOZZ		3050817-0	92392	BRACKET: CROSS FRAME TUBES
C	5	20	MOOOO		3050847-7	92392	HOSE ASSEMBLY: LIFT, LEFT MANUFACTURE FROM:
C	5		PAOZZ		FC9436-16-94	01276	COUPLING, AS REQUIRED
C	5		PCOZZ	4720-930-5389			HOSE, AS REQUIRED
C	5	20	MOOOO		3050848-5	92392	HOSE ASSEMBLY: LIFT, RIGHT MANUFACTURE FROM:
C	5		PAOZZ		FC9436-16-94	01276	COUPLING, 2 EA
C	5		PCOZZ	4720-930-5389			HOSE, AS REQUIRED
C	5	21	MOOOO		3050846-9	92392	HOSE ASSEMBLY: LOWER, RIGHT MANUFACTURE FROM:
C	5		PAOZZ		FC9436-16-94	01276	COUPLING, 2 EA
	5		PCOZZ	4720-930-5389			HOSE, AS REQUIRED
C	5	21	MOOOO	4720-930-5389	3050845-1	92392	HOSE ASSEMBLY: LOWER, LEFT MANUFACTURE FROM:
C	5		PAOZZ		FC9436-16-94	01276	COUPLING, AS REQUIRED
C	5		PCOZZ	4720-930-5389			HOSE, AS REQUIRED
C	5	22	PAOZZ		921117-8	92392	FLANGE, SPLIT: TUBE MTG
C	5	23	PCOZZ		923664-7	92392	PACKING, PREFORMED: SPLIT FLANGE
C	5	24	PAOZZ	5305-069-5574	MS90725-86	96906	SCREW, CAP, HEXAGON HEAD: SPLIT FLANGE MTG
C	5	25	PAOZZ		MS35338-9	96906	WASHER, LOCK: SPLIT FLANGE MTG
C	6	1	PAOZZ	4710-115-0510	3050404-7	92392	TUBE ASSEMBLY: DEMAND VALVE TO STRAIGHT VALVE
C	6	2	PAOZZ		922974-1	92392	ELBOW, PIPE TO TUBE: DEMAND VALVE TUBE
C	6	3	PAOZZ	4710-143-8994	3044170-3	92392	TUBE ASSEMBLY: STRAIGHT VALVE TO CONTROL VALVE
C	6	4	PAOZZ	4710-115-0509	3050421-1	92392	TUBE ASSEMBLY: DEMAND VALVE TO STRAIGHT VALVE
C	6	5	PAOZZ	5305-269-3211	MS90725-60	96906	SCREW, CAP, HEXAGON HEAD: SPLIT FLANGE MTG
C	6	6	PAOZZ	5310-637-9541	MS35338-46	96906	WASHER, LOCK: HOSE CLAMP, SPLIT FLANGE
C	6	7	PAOZZ	3830-852-5887	921116-0	90940	FLANGE, SPLIT: TUBE MTG
C	6	8	PCOZZ	5330-110-5685	923718-1	92392	PACKING, PREFORMED: TUBE MTG
C	6	9	PAOZZ	5305-269-3209	MS90725-58	96906	SCREW, CAP, HEXAGON HEAD: HOSE CLAMP
C	6	10	XBOZZ		3002196-8	92392	CLAMP, LOOP: HYDRAULIC HOSE
C	6	11	PAOZZ	4710-115-0506	3050434-4	92392	TUBE ASSEMBLY: TANK TO SUCTION TUBE
C	6	12	PAOZZ	4710-115-0507	3050441-9	92392	TUBE ASSEMBLY: SUCTION TUBE TO PUMP
C	6	13	PAOZZ		921203-6	92392	ELBOW, PIPE TO HOSE: TUBE MTG
C	6	14	PCOZZ		923664-7	92392	PACKING, PREFORMED: ELBOW

	(a) FIG NO.	(b) ITEM NO.	SMR CODE	FEDERAL STOCK NUMBER	PART NUMBER	FSCM	USABLE ON CODE	U/M	ING IN UNIT
C	6	15	XBOZZ		3001437	92392	CLAMP, LOOP: HYDRAULIC LINE	EA	2
C	6	16	PAOZZ	5305-269-2803	MS90726-60	96906	SCREW, CAP, HEXAGON HEAD: CLAMP MTG, 3/8 X 1 IN.	EA	1
C	6	17	MOOOO		3050854-3	92392	HOSE ASSEMBLY: STRAIGHT VALVE TO CONTROL VALVE MANUFACTURE FROM:	EA	1
C	6		PCOZZ	4720-639-9899			HOSE, AS REQUIRED	EA	
C	6	18	PAOZZ	4710-115-0508	3051184-4	92392	TUBE ASSEMBLY: HOSE TO DEMAND VALVE	EA	1
C	6	19	PAOZZ	4730-738-7543	190263-12	01276	ELBOW, PIPE TO TUBE: HYDRAULIC HOSE	EA	2
C	6	20	MOOOO		3051186-9	92392	HOSE ASSEMBLY: PUMP TO DEMAND VALVE MANUFACTURE FROM:	EA	1
C	6		PAOZZ	4730-203-3551			FITTING, 1 REQUIRED	EA	
C	6		PAOZZ	4730-738-7543			FITTING, 1 REQUIRED	EA	
C	6		PCOZZ	4720-639-9899			HOSE, AS REQUIRED	FT	
C	7	1	PCOZZ	5330-110-5685	923718-1	92392	PACKING, PREFORMED: HOSE MTG	EA	16
C	7	2	PAOZZ	4710-168-1849	3050821-2	92392	TUBE ASSEMBLY: VALVE TO CLAM CYLINDER	EA	1
C	7	3	XBOZZ		3011248-6	92392	CLAMP, LOOP: CROSSOVER TUBE	EA	4
C	7	4	PAOZZ	5310-261-7340	MS35338-8	96906	WASHER, LOCK: HOSE CLAMP, 3/8 IN.	EA	8
C	7	5	PAOZZ	5305-269-3209	MS90725-58	96906	SCREW, CAP, HEXAGON HEAD: CLAMP MTG, 3/8-16 THD SIZE, 3/4 IN. LG	EA	8
C	7	6	MOOOO		3050813-9	92392	HOSE ASSEMBLY: VALVE TO CLAM CYLINDER MANUFACTURE FROM:	EA	2
C	7		PAOZZ	4730-203-3551			FITTING, 1 REQUIRED	EA	
C	7		PAOZZ	4730-930-4524			FITTING, 1 REQUIRED	EA	
C	7		PCOZZ	4720-639-9899			HOSE, AS REQUIRED	EA	
C	7	7	PAOZZ		210295-125	01276	NUT, LOCKING: BULKHEAD FITTING	EA	2
C	7	8	PAOZZ	4710-115-0528	925031-7	92392	FITTING, BULKHEAD: HYDRAULIC HOSE	EA	2
C	7	9	PAOZZ	4710-168-1813	3050810-5	92392	TUBE ASSEMBLY: VALVE TO CLAM CYLINDER	EA	2
C	7	10	XBOZZ		78067	80194	CLAMP, LOOP: HOSE TO FRAME	EA	2
C	7	11	MOOOO		3050812-1	92392	HOSE ASSEMBLY: VALVE TO CLAM CYLINDER MANUFACTURE FROM:	EA	2
C	7		PAOZZ		FC9434-16-94	01276	COUPLING, 1 REQUIRED	EA	
C	7		PCOZZ	4720-930-5389			HOSE, 60 IN. REQUIRED	EA	
C	7	12	PAOZZ	4710-115-0529	3050805-5	92392	TUBE ASSEMBLY: VALVE TO CLAM CYLINDER	EA	1
C	7	13	PAOZZ	5305-269-3209	MS90725-58	96906	SCREW, CAP, HEXAGON HEAD: SPLIT FLANGE MTG	EA	16
C	7	14	PAOZZ	5310-637-9541	MS35338-46	96906	WASHER, LOCK: SPLIT FLANGE MTG	EA	16
C	7	15	PAOZZ	4710-168-1817	3050818-8	92392	TUBE ASSEMBLY: VALVE TO CLAM CYLINDER	EA	1
C	7	16	PAOZZ	5305-983-7452	MS16998-78	96906	SCREW, CAP, HEXAGON HEAD: VALVE TUBE MTG, 3/8-24 THD SIZE, 2 IN. LG	EA	8
C	7	17	PAOZZ		3050819-6	92392	TUBE ASSEMBLY: VALVE TO CLAM CYLINDER	EA	1
C	7	18	PAOZZ	4730-114-0992	70916	70434	FLANGE, SPLIT: TUBE MTG	EA	8
C	7	19	PAOZZ		3050822-0	92392	TUBE ASSEMBLY: VALVE TO CROSS FRAME	EA	1
C	7	20	PAOZZ	4710-168-1847	3050823-8	92392	TUBE ASSEMBLY: VALVE TO CROSS FRAME	EA	1
C	7	21	PAOZZ	4710-168-1824	3050824-6	92392	TUBE ASSEMBLY: VALVE TO CROSS FRAME	EA	1
C	7	22	PAOZZ	4710-115-0524	3050825-3	92392	TUBE ASSEMBLY: VALVE TO CROSS FRAME	EA	1
C	7	23	MOOOO		3050811-3	92392	HOSE ASSEMBLY: TUBE TO CROSS FRAME MANUFACTURE FROM:	EA	4
	7		PAOZZ		FC9434-16-94	01276	COUPLING, 2 REQUIRED	EA	

	ILLUSTRATION (a) FIG NO.	(b) ITEM NO.	SMR CODE	FEDERAL STOCK NUMBER	PART NUMBER	FSCM	DESCRIPTION USABLE ON CODE	U/M
C	7		PCOZZ	4720-930-5389			HOSE, AS REQUIRED	EA
C	7	24	PAOZZ	4710-115-0525	3050843-6	92392	TUBE ASSEMBLY: HOSE TO CROSS FRAME	EA
C	7	25	PAOZZ	4710-115-0526	3050840-2	92392	TUBE ASSEMBLY: HOSE TO CROSS FRAME	EA
C	7	26	PAOZZ	4710-168-1846	3050820-4	92392	TUBE ASSEMBLY: HOSE TO CLAM CYLINDER	EA
C	7	27	PAOZZ	3830-852-5887	921116-0	92392	FLANGE, SPLIT: HOSE MTG	EA
C	7	28	PAOZZ	4710-115-0530	3050806-3	92392	TUBE ASSEMBLY: VALVE TO CLAM CYLINDER	EA
N	7		PAOZZ		3052530-7	92392	SHIM: CLAMP	EA
C	8	1	PCOZZ		923664-7	92392	PACKING, PREFORMED: HOSE TO VALVE	EA
C	8	2	PAOZZ	4710-115-0527	3051183-6	92392	TUBE ASSEMBLY: DEMAND VALVE TO TANK	EA
C	8	3	PAOZZ	5305-069-5574	916197	92392	SCREW, CAP, HEXAGON HEAD: SPLIT FLANGE	EA
C	8	4	PAOZZ	5310-010-3322	904267	92392	WASHER, LOCK: SPLIT FLANGE	EA
C	8	5	PAOZZ		921117-8	92392	FLANGE, SPLIT: HOSE MTG	EA
C	8	6	MOOOO		3050855-0	92392	HOSE ASSEMBLY: HYDRAULIC PUMP TO DEMAND VALVE MANUFACTURE FROM:	EA
C	8		PAOZZ		FC9440	01276	COUPLING, 1 REQUIRED	EA
C	8		PAOZZ		FC9439-2016-94	01276	COUPLING, 1 REQUIRED	EA
C	8		PCOZZ	4720-930-5389			HOSE, AS REQUIRED	EA
C	8	7	XBOZZ		3015837-2	92392	CLAMP, LOOP: HOSE MTG	EA
C	8	8	PAOZZ	5305-269-2803	MS90726-60	96906	SCREW, CAP, HEXAGON HEAD: CLAMP MTG	EA
C	8	9	MOOOO		3050844-4	92392	HOSE ASSEMBLY: CONTROL VALVE TO DEMAND VALVE MANUFACTURE FROM:	EA
C	8		PAOZZ		FC9436-16-94	01276	COUPLING, 1 REQUIRED	EA
C	8		PAOZZ		FC9436-2016-94	01276	COUPLING, 1 REQUIRED	EA
C	8		PCOZZ	4720-930-5389			HOSE, AS REQUIRED	EA
C	8	10	MOOOO		3050857-6	92392	HOSE ASSEMBLY: PUMP TO CONTROL VALVE MANUFACTURE FROM:	EA
C	8		PAOZZ		FC9439-2016-94	01276	COUPLING, AS REQUIRED	EA
C	8		PAOZZ		FC9437-2016-94	01276	COUPLING, 1 REQUIRED	EA
C	8		PCOZZ	4720-930-5389			HOSE, AS REQUIRED	EA
C	8	11	MOOOO		3051185-1	92392	HOSE ASSEMBLY: DEMAND VALVE TO TANK MANUFACTURE FROM:	EA
C	8		PAOZZ	4730-738-7548			FITTING, 1 REQUIRED	EA
C	8		PAOZZ	4730-738-7543			FITTING, 1 REQUIRED	EA
C	8		PCOZZ	4720-639-9899			HOSE, AS REQUIRED	EA
C	8	12	PAOZZ		921203-6	92392	ELBOW, PIPE TO TUBE: HOSE TO TANK	EA
C	8	13	PAOZZ	5310-543-5973	MS35691-65	96906	NUT, PLAIN, HEXAGON: CLAMP MTG	EA
C	9	1	PCOZZ	5330-115-1457	923578-9	92392	PACKING, PREFORMED: TUBE TO PUMP	EA
C	9	2	PAOZZ	4730-115-0250	23604-24X	99103	FLANGE, PIPE: TUBE TO PUMP	EA
C	9	3	PAOZZ	5310-010-3323	MS35338-10	96906	WASHER, LOCK: PIPE FLANGE MTG	EA
C	9	4	PAOZZ		MS35297-111	96906	SCREW, CAP, HEXAGON HEAD: PIPE FLANGE MTG	EA
C	9	5	PAOZZ	4710-168-1810	3050435-1	92392	TUBE ASSEMBLY, SUCTION: TANK TO PUMP	EA
C	9	6	PAOZZ		36P	66295	CLAMP, HOSE: CONNECTING HOSE	EA
C	9	7	MOOOO		3020955-5	92392	HOSE, CONNECTING: TUBE TO TUBE MANUFACTURE FROM:	EA
C	9		PCOZZ	4720-640-0362			HOSE, AS REQUIRED	EA

(a) FIG NO.	(b) ITEM NO.	SMR CODE	FEDERAL STOCK NUMBER	PART NUMBER	FSCM	USABLE ON CODE	U/M	INC IN UNIT
9	8	PAOZZ	4710-168-1820	3045837-6	92392	TUBE ASSEMBLY, SUCTION; TANK TO PUMP	EA	1
10	1	PAOZZ	5310-010-3323	MS35338-10	96906	WASHER, LOCK; SPLIT FLANGE	EA	8
10	2	PAOZZ	5305-042-6417	MS90725-121	96906	SCREW, CAP, HEXAGON HEAD; SPLIT FLANGE	EA	8
10	3	PAOZZ	4730-470-6419	921118-6	92392	FLANGE, SPLIT; TUBE MTG	EA	4
10	4	PAOZZ	4710-168-1818	3045859-0	92392	TUBE ASSEMBLY; TANK TO VALVE	EA	1
10	5	PAOZZ	4730-702-2750	MS35842-3	96906	CLAMP, HOSE; CONNECTING HOSE	EA	4
10	6	PCOZZ	4720-640-5439	7044	64104	HOSE, CONNECTING; TANK TO VALVE TUBE	EA	1
10	7	PAOZZ	6680-115-0523	3050833-7	92392	DIP STICK; HYDRAULIC TANK	EA	1
10	8	PAOZZ	4710-168-1822	3045855-8	92392	TUBE ASSEMBLY; TANK TO VALVE	EA	1
10	9	PCOZZ	5330-115-1456	923587-0	92392	PACKING, PREFORMED; TUBE TO TANK	EA	2
10	10	PAOZZ	2590-133-9981	4004	01943	CAP ASSEMBLY; OIL FILLER	EA	1
10	11	PAOZZ	5305-269-2807	MS90726-64	96906	SCREW, CAP, HEXAGON HEAD; COVER MTG	EA	4
10	12	PAOZZ	5310-261-7340	MS35338-8	96906	WASHER, LOCK; COVER MTG	EA	4
10	13	XBOZZ		3044842-7	92392	COVER; TANK	EA	1
10	14	PA000	2590-133-9980	V110-164	91561	VALVE ASSEMBLY; PRESSURE RELIEF	EA	1
10	15	PAOZZ		6302-18	91561	WASHER, LOCK; VALVE MTG	EA	2
10	16	PAOZZ		6211-031	91561	SCREW; VALVE MTG	EA	2
10	17	PCOZZ	5330-115-1467	TS33-440	91265	PACKING, PREFORMED; COVER MTG	EA	2
10	18	PAOZZ	4320-656-7471	23438058	78252	STRAINER, OIL	EA	1
10	19	XBOZZ		3045887-1	92392	BRACKET ASSEMBLY, STRAINER	EA	1
10	20	XBOZZ		3045873-1	92392	BAIL, STRAINER	EA	1
10	21	XBOZZ		3019231-4	92392	BAFFLE, STRAINER	EA	1
10	22	PAOZZ	2590-115-0522	3032277-0	92392	STRAINER, OIL	EA	1
10	23	XBOZZ		3011349-2	92392	MAGNET, STRAINER	EA	1
10	24	PCOZZ	5330-115-1458	923922-9	92392	PACKING, PREFORMED; MAGNET	EA	1
10	25	XBFZZ		3050836-0	92392	TANK, HYDRAULIC	EA	1
10	26	PCOZZ		2155	79150	GASKET; DRAIN PLUG	EA	1
10	27	PAOZZ		3010159-6	92392	PLUG ASSEMBLY, DRAIN	EA	1
10	28	PAFZZ	5310-265-9217	MS35690-825	96906	NUT, PLAIN, HEXAGON; TANK	EA	4
10	29	PAFZZ	5310-010-3323	MS35338-10	96906	WASHER, LOCK; TANK MTG	EA	4
10	30	PAFZZ	5310-810-8336	MS15795-18	96906	WASHER, FLAT; TANK MTG	EA	4
10	31	PAFZZ	5305-761-4227	MS90726-111	96906	SCREW, CAP, HEXAGON HEAD; TANK MTG	EA	4
10	32	PAOZZ	4330-168-1861	6666492	81321	FILTER	EA	1
10	33	XBOZZ		3045784-0	92392	PLATE, BY-PASS VALVE	EA	1
10	34	PAOZZ	4820-115-0247	M2361-9-15	92863	VALVE, BY-PASS	EA	1
10	35	PAOZZ	5305-269-2805	MS90726-62	96906	SCREW, CAP, HEXAGON HEAD; COVER MTG	EA	4
10	36	XBOZZ		3045324-5	92392	COVER, FILTER	EA	1
						GROUP 03 - BUCKET AND BOOM CYLINDERS		
11	1	PAOZZ	2520-133-9967	R111	78643	BALL JOINT; INDICATOR ROD	EA	1
11	2	PAOZZ		MS35691-825	96906	NUT, JAM, HEXAGON; BALL JOINT, 1/2-20 THD SIZE	EA	1

	(1) ILLUSTRATION (a) FIG NO.	(b) ITEM NO.	(2) SMR CODE	(3) FEDERAL STOCK NUMBER	(4) PART NUMBER	(5) FSCM	(6) DESCRIPTION USABLE ON CODE	(7) U/M	(8) QTY INC IN UNIT
C	11	3	XBOZZ		654274-1	92392	TUBE ASSEMBLY, INDICATOR ROD	EA	1
N	11	4	XBOZZ		664373-8	92392	TRANSFER POSITION INDICATOR	EA	1
C	11	5	PAOZZ	5305-558-4901	MS35301-62	96906	SCREW, CAP, HEXAGON HEAD: INDICATOR MTG, 3/8-16 THD SIZE, 1 1/4 IN. LG	EA	2
C	11	6	PAOZZ	5310-261-7340	MS35338-8	96906	WASHER, LOCK: INDICATOR MTG, 3/8 IN. DIA	EA	2
C	11	7	PAOZZ	5310-012-0377	MS35690-605	96906	NUT, PLAIN, HEXAGON: INDICATOR MTG, 3/8-16 THD SIZE	EA	2
C	11	8	PAOZZ	5310-010-3323	MS35338-10	96906	WASHER, LOCK: BALL JOINT, 1/2 IN. DIA	EA	1
C	11	9	PAOZZ	5310-265-9217	MS35690-825	96906	NUT, PLAIN, HEXAGON: BALL JOINT, 1/2-20 THD SIZE	EA	1
C	12		PAOHH	3805-043-5344	3050878-2	92392	CYLINDER ASSEMBLY, RIGHT: DUMP (COMPONENTS SAME AS CYLINDER ASSEMBLY, FSN 3805-010-0250, EXCEPT WHERE INDIVIDUAL COMPONENTS ARE ANNOTATED)	EA	1
C	12		PAOHH	3830-010-0205	3050877-4	92392	CYLINDER ASSEMBLY, LEFT: DUMP	EA	1
C	12	1	PCHHH	3810-115-0515	3042802-3	92392	HEAD ASSEMBLY, CYLINDER	EA	2
C	12	2	KBHZZ		68X1808	73680	SEAL, PLAIN, ENCASED (PART OF KIT, FSN 2815-920-6847)	EA	2
C	12	3	PAHZZ		MS51097-62	96906	SCREW, CAP, HEXAGON HEAD: HEAD ASSEMBLY MTG, 3/8-16 X 1 1/2 DRILLED HEAD	EA	8
C	12	4	XAHZZ		3016405-7	92392	PLATE, END	EA	2
C	12	5	KBHZZ		3016601-1	92392	BEARING, SLEEVE (PART OF KIT, FSN 2815-920-6847)	EA	2
C	12	6	KBHZZ		10998-0204	73680	PACKING ASSEMBLY, HEAD (PART OF KIT, FSN 2815-920-6847)	EA	4
C	12	7	XAHZZ		3016272-1	92392	HEAD, CYLINDER	EA	2
C	12	8	KBHZZ		3016189-7	92392	RETAINER, PACKING (PART OF KIT, FSN 2815-920-6847)	EA	2
C	12	9	KBHZZ		924733-9	92392	PACKING, PREFORMED (PART OF KIT, FSN 2815-920-6847)	EA	2
C	12	10	XAHHH		3051174-5	92392	TUBE ASSEMBLY, CYLINDER	EA	2
C	12	11	PAHZZ	3120-876-9345	3050171-2	92392	BEARING, SLEEVE	EA	2
C	12	12	PCOZZ	5330-110-5685	923718-1	92392	PACKING, PREFORMED: TUBE MTG	EA	2
C	12	13	PCOZZ	3830-852-5887	921116-0	90940	FLANGE, SPLIT	EA	4
C	12	14	PAOZZ	5310-637-9541	MS35338-46	96906	WASHER, LOCK: SPLIT FLANGE	EA	8
C	12	15	PAOZZ	5305-558-4901	MS35301-62	96906	SCREW, CAP, HEXAGON HEAD: SPLIT FLANGE MTG, 3/8 IN. NC X 1 1/4 IN.	EA	8
C	12	16	XBOZZ		TC12	75272	CLAMP, LOOP: TUBE	EA	2
C	12	17	PAHZZ		924729-7	92392	LOCKNUT, TUBE: ROD	EA	2
C	12	18	KBHZZ		3001482-3	92392	BEARING, SLEEVE: PISTON (PART OF KIT, FSN 2815-920-6847)	EA	4
C	12	19	XBHZZ		3042509-4	92392	PISTON	EA	4
C	12	20	KBHZZ		87316-3001476	73680	PACKING ASSEMBLY, PISTON (PART OF KIT, FSN 2815-920-6847)	EA	2
C	12	21	PAHZZ		3003160-3	92392	SHIM: PISTON	EA	V
C	12	22	PAHHH	3805-115-0517	3050876-6	92392	ROD, PISTON, LINEAR: RH (COMPONENTS SAME AS ROD, P/N 3050875-8 (92392)) (USED ON CYLINDER ASSEMBLY, P/N 3050878-2 (92392), ONLY)	EA	1
C	12	22	PAHHH	3805-115-0516	3050875-8	92392	ROD, PISTON, LINEAR: LH (USED ON CYLINDER ASSEMBLY, P/N 3050877-4 (92392), ONLY)	EA	1
C	12	23	PAHZZ	3120-115-1397	3045049-8	92392	BEARING, SLEEVE: ROD	EA	2
C	12	24	PAOZZ	4710-168-1821	3051118-2	92392	TUBE ASSEMBLY	EA	2
			XBOZZ		3061905	92392	ROD, BUCKET LEVEL INDICATOR	EA	1

ILLUSTRATION (a) FIG NO.	(b) ITEM NO.	SMR CODE	NATIONAL STOCK NUMBER	PART NUMBER	FSCM	DESCRIPTION USABLE ON CODE	U/M	QTY ING IN UNIT
13		PAOHH	3805-00-010-0199	3050872-5	92392	CYLINDER ASSEMBLY, LIFT, RIGHT (COMPONENTS SAME AS CYLINDER ASSEMBLY, NSN 3805-00-043-5343, EXCEPT WHERE INDIVIDUAL COMPONENTS ARE ANNOTATED)	EA	1
13		PAOHH	3805-00-043-5343	3050871-7	92392	CYLINDER ASSEMBLY, LIFT, LEFT	EA	1
13	1	PAHHH	3805-00-115-0521	3050865-9	92392	ROD, ASSEMBLY, PISTON	EA	2
13	2	PAHZZ		3045049-8	92392	BEARING, SLEEVE	EA	2
13	3	XAHZZ		3050873-3	92392	ROD, PISTON	EA	1
13	4	PCHHH	3805-00-115-0520	3045069-6	92392	HEAD ASSEMBLY, CYLINDER	EA	1
13	5	PAHZZ		MS51097-115	96906	SCREW, CAP, HEXAGON HEAD: PLATE MTG, 1/2-13 X 1 3/4 IN. DRILLED HEAD	EA	8
13	6	KBHZZ		3010603-3	92392	WIRE, LOCKING (PART OF KIT, NSN 3805-00-115-0446)	EA	2
13	7	KBHZZ		3008139-2	92392	SEAL, PLAIN ENCASED (PART OF KIT, NSN 3805-00-115-0446)	EA	2
13	8	XAHZZ		3019937-6	92392	PLATE, END	EA	2
13	9	PAHZZ	3120-00-115-1396	3019891-5	92392	BEARING, SLEEVE	EA	1
13	10	KBHZZ		3048694-9	92392	PACKING SET (PART OF KIT, NSN 3805-00-115-0446)	EA	2
13	11	XAHZZ		3019859-2	92392	HEAD	EA	1
13	12	KBHZZ		3019839-4	92392	RETAINER, PACKING (PART OF KIT, NSN 3805-00-115-0446)	EA	2
13	13	KBHZZ		924195-1	92392	PACKING, PREFORMED (PART OF KIT, NSN 3805-00-115-0446)	EA	2
13	14	XBHZZ		3045496-1	92392	PISTON	EA	1
13	15	KBHZZ		052043-1	92392	PACKING SET (PART OF KIT, NSN 3805-00-115-0446)	EA	2
13	16	KBHZZ	5365-00-116-3064	3019828-7	92392	RING, WEAR (PART OF KIT, NSN 3805-00-115-0446)	EA	1
13	17	PAHZZ	5310-00-897-3442	3017556-6	92392	NUT, LOCKING: PISTON	EA	2
13	18	XAHZZ		3050869-1	92392	TUBE ASSEMBLY, CYLINDER (USED ON CYLINDER ASSEMBLY, NSN 3805-00-043-5343, ONLY)	EA	1
13	18	XAHZZ		3050870-9	92392	TUBE ASSEMBLY, CYLINDER (USED ON CYLINDER ASSEMBLY, NSN 3805-00-010-0199, ONLY)	EA	1
13	19	PAHZZ		3045463	92392	BUSHING, PIVOT RING	EA	2
14		PAOHH	3805-00-927-4961	501680	80194	CYLINDER ASSEMBLY, CLAM, RIGHT (COMPONENTS SAME AS CYLINDER ASSEMBLY, NSN 3805-00-010-0202, EXCEPT WHERE INDIVIDUAL COMPONENTS ARE ANNOTATED)	EA	1
14		PAOHH	3805-00-010-0202	501681	80194	CYLINDER ASSEMBLY, CLAM, LEFT	EA	1
14	1	PAOZZ	4730-00-050-4208	MS15003-1	96906	FITTING, LUBRICATION: ROD ASSEMBLY	EA	1
14	2	PCHZZ	5330-00-770-9136	40026	80194	SEAL, WIPER, PISTON ROD	EA	2
14	3	PAHZZ	5310-00-059-9264	MS21045C6	96906	NUT, SELF-LOCKING, HEXAGON; FLANGE MTG, 3/8-24 THD SIZE	EA	4
14	4	PAHZZ		40005	80194	STUD, PLAIN: FLANGE MTG, 3/8-24 THD SIZE, 1 3/4 IN. LG	EA	4
14	5	XBHZZ	3830-00-066-4944	28562	80194	FLANGE, PACKING	EA	2
14	6	PCHZZ	5330-00-225-9122	28121	80194	PACKING SET	EA	2
14	7	PAHZZ	3805-00-900-9895	28221M1	80194	HEAD CYLINDER	EA	2
14	8	PCHZZ	5330-00-871-3713	6332	80194	PACKING, PREFORMED	EA	2
14	9	XBHZZ	3830-00-066-4947	28259	80194	PISTON, UPPER	EA	2
14	10	PCHZZ	5330-00-770-9138	25984	80194	PACKING SET, PISTON	EA	2

(1) ILLUSTRATION (a) FIG NO.	(b) ITEM NO.	(2) SMR CODE	(3) NATIONAL STOCK NUMBER	(4) PART NUMBER	(5) FSCM	(6) DESCRIPTION USABLE ON CODE	(7) U/M
14	11	PCHZZ	5330-00-849-6979	5811	80194	PACKING, PREFORMED	EA
14	12	XBHZZ	3830-00-066-4948	28225	80194	PISTON, LOWER	EA
14	13	PAHZZ	2590-00-771-0649	23703	80194	RING, WEAR	EA
14	14	PAHZZ	5310-00-115-6213	17162	80194	NUT, SELF-LOCKING, HEXAGON: PISTON	EA
14	15	XAHZZ		27940M1	80194	TUBE, CYLINDER (USED ON CYLINDER ASSEMBLY, NSN 3805-00-010-0202, ONLY)	EA
14	15	XAHZZ		27940M1	80194	TUBE, CYLINDER (USED ON CYLINDER ASSEMBLY, NSN 3805-00-927-4961, ONLY)	EA
14	16	PCOZZ	5330-00-842-8341	921349-7	92392	PACKING, PREFORMED: FITTING	EA
14	17	PAOZZ		923080-6	92392	ADAPTER, PIPE TO HOSE	EA
14	18	PAHHH	3805-00-900-9705	210004	80194	ROD ASSEMBLY, PISTON	EA
14	19	PAHZZ	3120-00-803-6154	23796	80194	BEARING, SLEEVE	EA
12		PCHZZ	2815-00-920-6847	3038846-6	92392	REPAIR KIT, CYLINDER DUMP (CONSISTS OF)	EA
12	2					1-SEAT	
12	5					1-BEARING	
12	6					1-PACKING ASSEMBLY	
12	8					1-RETAINER	
12	9					1-PACKING	
12	18					2-BEARING	
12	20					1-PACKING ASSEMBLY	
12						4-SCREW	
12						2-WIRE	
13		PCHZZ	3805-00-115-0446	3048831-6	92392	REPAIR KIT, CYLINDER LIFT, (CONSISTS OF)	EA
13	6					2-WIRE	
13	7					1-SEAL	
13	10					1-PACKING SET	
13	12					1-RING	
13	13					1-PACKING	
13	15					1-PACKING SET	
13	16					2-RING	
						GROUP 04 - BUCKET AND BOOM HYDRAULIC CONTROL VALVE, CONTROLS AND MAIN HYDRAULIC PUMP	
15	1	PAOZZ		3001171-2	92392	KNOB, CONTROL	EA
15	2	PAOZZ	5305-00-206-0996	171123	24617	SCREW, CAP, HEXAGON HEAD: PLATE MTG	EA
15	3	PAOZZ	5310-00-637-9541	MS35338-46	96906	WASHER, LOCK: PLATE MTG, BALL JOINT MTG	EA
15	4	PAOZZ		MS15975-15	96906	WASHER, FLAT: PLATE MTG	EA
15	5	XBOZZ		3051096-0	92392	PLATE, COVER	EA
15	6	XBOZZ		3051966-4	92392	LEVER ASSEMBLY, CLAMP AND DUMP CONTROL	EA
15	7	PAOZZ	5305-00-206-0996	171123	24617	SCREW, CAP, HEXAGON HEAD: SUPPORT PLATE	EA
15	8	XBOZZ		3051945-8	92392	PLATE, SUPPORT	EA
15	9	PAOZZ	5306-00-898-9724	3029874-8	92392	PIN: CLAMP LEVER	EA
15	10	PAOZZ		70925041	92392	BEARING, ROD END	EA

ILLUSTRATION (a) FIG NO.	(b) ITEM NO.	SMR CODE	NATIONAL STOCK NUMBER	PART NUMBER	FSCM	DESCRIPTION USABLE ON CODE	U/M	QTY INC IN UNIT
15	11	PAOZZ	5310-00-656-0227	MS35691-825	96906	NUT, JAM, HEXAGON: YOKE ADJUSTING, 1/2-20 THD SIZE	EA	8
15	12	PAOZZ	5315-00-115-6267	3025958-4	92392	PIN, STRAIGHT, HEADED: CLEVIS	EA	3
15	13	PAOZZ	5340-00-115-1469	3043676-0	92392	CLEVIS, ROD END	EA	3
15	14	PAOZZ	5315-00-839-5822	MS24665-353	96906	PIN, COTTER: ROD END	EA	3
15	15	XBOZZ		3051944-1	92392	ROD, CONTROL, CLAMP	EA	1
15	16	XBOZZ		3051900-3	92392	LEVER ASSEMBLY	EA	1
15	17	PAOZZ	3120-00-287-6571	AA1049-14	70417	BEARING, SLEEVE	EA	2
15	18	PAOZZ	5315-00-115-1491	922419-7	92392	PIN, SPRING	EA	2
15	19	PAOZZ		917666-0	92392	CLEVIS, ROD END	EA	2
15	20	XBOZZ		3051082-0	92392	LEVER (USED ON LEVER ASSEMBLY, P/N 3051900-3 (92392), ONLY)	EA	1
15	21	XBOZZ		3051898-9	92392	LEVER ASSEMBLY (COMPONENT SAME AS LEVER ASSEMBLY, P/N 3051900-3 (92392), EXCEPT WHERE INDIVIDUAL COMPONENTS ARE ANNOTATED)	EA	1
15	22	XBOZZ		3051083-8	92392	LEVER (USED ON LEVER ASSEMBLY, P/N 3051898-9 (92392), ONLY)	EA	1
15	23	XBOZZ		3051049-9	92392	SPACER, SHAFT	EA	1
15	24	XBOZZ		3051051-5	92392	SHAFT, LEVER	EA	2
15	25	XBOZZ		3051943-3	92392	ROD CONTROL, DUMP	EA	1
15	26	XBOZZ		3051047-3	92392	TUBE, SHAFT	EA	1
15	27	XBOZZ		30510523	92392	ROD, THREADED	EA	1
15	28	PAOZZ		122236	00000	NUT, PLAIN, HEXAGON: BALL JOINT	EA	4
15	29	PAOZZ	3930-00-904-5303	R109	78643	BALL JOINT	EA	2
15	30	XBOZZ		3051088-7	92392	SUPPORT, CONTROL	EA	1
15	31	PAOZZ	5305-00-269-3209	MS90725-58	96906	SCREW, CAP, HEXAGON HEAD: CONTROL SHAFT	EA	4
15	32	PAOZZ	5305-00-269-3214	MS90725-64	96906	SCREW, CAP, HEXAGON HEAD: SUPPORT MTG	EA	4
15	33	XBOZZ		3051980-5	92392	LEVER ASSEMBLY, BOOM CONTROL	EA	1
15	34	XBOZZ		3051942-5	92392	ROD, CONTROL	EA	1
15	35	PAOZZ	3120-00-115-1398	3007065-0	92392	BEARING, SLEEVE	EA	1
15	36	XBOZZ		3051964-9	92392	LEVER, CONTROL	EA	1
15	37	PAOZZ		922419-7	92392	PIN, SPRING	EA	1
15	38	PAOZZ	5310-00-809-8533	MS27183-23	96906	WASHER, FLAT: SHAFT	EA	2
15	39	XBOZZ		3052005-0	92392	SPACER, SHAFT	EA	1
15	40	XBOZZ		3051053-1	92392	ROD, THREADED	EA	1
15	41	XBOZZ		3051048-1	92329	SPACER, SHAFT	EA	1
16	1	PAFZZ		MS35335-9	96906	WASHER, LOCK: VALVE MTG	EA	4
16	2	PAFZZ		MS51967-13	96906	NUT, PLAIN, HEXAGON: VALVE MTG	EA	4
16	3	PAFZZ	5310-00-265-9217	MS35690-825	96906	NUT, PLAIN, HEXAGON: BRACKET MTG	EA	2
15	4	PAFZZ	5310-00-010-3323	MS35338-10	96906	WASHER, LOCK: BRACKET MTG	EA	2
16	5	XBFZZ		3045864-0	92392	BRACKET, VALVE MTG	EA	1
16	6	PAFZZ	5310-00-810-8336	MS15795-18	96906	WASHER, FLAT: VALVE MTG, 1/2 IN.	EA	2
16	7	PAFZZ	5305-00-761-4227	MS90726-111	96906	SCREW, CAP, HEXAGON HEAD: BRACKET MTG	EA	2
16	8	PAFZZ	5305-00-115-6179	923909-6	92392	SCREW, CAP, HEXAGON HEAD: VALVE MTG, 1/2-13 X 5 1/2 IN., NO. 12 POINT SCREW	EA	4

(1) ILLUSTRATION (a) FIG. NO.	(b) ITEM NO.	(2) SMR CODE	(3) FEDERAL STOCK NUMBER	(4) PART NUMBER	(5) FSCM	(6) DESCRIPTION USABLE ON CODE	(7) U/M	Q (IN I UT
C 16	9	PAFHH	4810-168-1834	3050928-5	45681	VALVE, HYDRAULIC CONTROL	EA	
C 17	1	XBHZZ		3044737	92392	EYE, SPOOL	EA	
C 17	2	PCHZZ		105X12L	45681	PACKING, PREFORMED: SPOOL EYE	EA	
C 17		PCHZZ	3805-020-2016	1653-562729	45681	SEAL ASSEMBLY, PLUG (COMPONENTS SAME AS SEAL ASSEMBLY, P/N 1653-656543 (45681), EXCEPT WHERE INDIVIDUAL COMPONENTS ARE ANNOTATED)	EA	
C 17		PCHZZ		1653-656543	45681	SEAL ASSEMBLY, SPOOL	EA	
C 17	3	KBHZZ		1653-562732	08752	RETAINER, WIPER	EA	
C 17	4	KBHZZ		1653-635926	45681	WIPER, SPOOL	EA	
C 17	5	KBHZZ		1653-562731	08752	RETAINER, PACKING	EA	
C 17	6	KBHZZ	3830-075-5269	104X220A	08752	PACKING, PREFORMED (COMPONENT OF SEAL ASSEMBLY, P/N 1653-656543 (45681), ONLY)	EA	
C 17	7	KBHZZ		1653-656545	45681	EXTENSION, HOUSING	EA	
C 17	8	KBHZZ		104X135A	45681	PACKING, PREFORMED	EA	
C 17	9	KBHZZ		1653-645567	45681	SLEEVE, HOUSING	EA	
C 17	10	XAHZZ		1653-665943	45681	SPOOL, BOOM	EA	
C 17	11	PAHZZ	3110-100-6159	98X36	45681	BALL, SEAT	EA	
C 17	12	XAHZZ		1653-675227	45681	SPOOL, BUCKET	EA	
C 17	13	XAHZZ		1653-665540	45681	BODY, VALVE	EA	
C 17	14	PAHZZ		1653-592409	08752	RETAINER, PACKING	EA	
C 17	15	XBHZZ		1653-675341	45681	NUT, LOCK: STUD	EA	
C 17	16	XBHZZ		1653-675343	45681	STUD, DETENT	EA	
C 17	17	XBHZZ		1653-666276	45681	COVER, SPOOL	EA	
C 17	18	PCHZZ	5330-115-1466	1653-675340	45681	WASHER, SEAL	EA	
C 17	19	XBHZZ	3110-100-6152	98X18	45681	BALL, DETENT	EA	
C 17	20	XBHZZ		1653-656598	45681	WASHER: DETENT BALL	EA	
C 17	21	PAHZZ	5340-115-3078	675644	45681	SPRING, DETENT BALL	EA	
C 17	22	XBHZZ		1653-655514	45681	CAM, ADJUSTER	EA	
C 17	23	XBHZZ		1653-675342	45681	CAP, ADJUSTER	EA	
C 17	24	PAHZZ	5305-112-9366	100X65	45681	SCREW, ASSEMBLED WASHER: COVER MTG	EA	
C 17	25	XBHZZ		1653-562708	45681	RETAINER, SPRING	EA	
C 17	26	PAHZZ	3805-979-3469	1653-562709	45681	SPRING, SPOOL	EA	
C 17	27	PAHZZ		0863003	45681	RING, RETAINING: SPRING	EA	
C 17	28	XBHZZ		1653-592282	08752	COVER, SPOOL	EA	
C 17	29	XBHZZ		1653-646719	45686	SEAT: MAIN RELIEF VALVE	EA	
C 17	30	XBHZZ		1653-646720	45686	HOLDER, SEAT	EA	
C 17	31	XBHZZ		1653-646721	45681	SPACER, SEAT HOLDER	EA	
C 17	32	PCHZZ	5330-236-1430	105X20L	45681	PACKING, PREFORMED	EA	
C 17	33	XBHZZ		108X20	45681	PLUG ASSEMBLY, RELIEF VALVE	EA	
C 17	34	XBHZZ		1653-645559	45681	SEAT, CHECK, SHORT	EA	
C 17	35	XBHZZ		1653-645557	45681	SEAT, POPPET, SHORT	EA	
C 17	36	PAHZZ	5340-115-3077	1653-645379	45681	SPRING, POPPET	EA	
C 17	37	PAHZZ	5330-115-3070	109X118T	45681	RETAINER, PACKING	EA	

	ILLUSTRATION (a) FIG NO.	(b) ITEM NO.	SMR CODE	FEDERAL STOCK NUMBER	PART NUMBER	FSCM	DESCRIPTION USAALE ON CODE	U/M	QTY INC IN UNIT
C	17	38	PCHZZ	5330-115-6150	104X118A	45681	PACKING, PREFORMED	EA	6
C	17	39	PCHZZ	5330-579-6495	104X119A	45681	PACKING, PREFORMED	EA	6
C	17	40	PCHZZ	5330-115-3051	109X119T	45681	RETAINER, PACKING	EA	8
C	17	41	XBHZZ		1653-645556	45681	CAP, CHECK VALVE	EA	3
C	17		PCHZZ		105X16L	45681	PACKING, PREFORMED	EA	3
C	17	42	XBHZZ		1653-645085	45681	POPPET, RELIEF	EA	6
C	17	43	PCHZZ	5330-579-6495	104187R1	45681	PACKING, PREFORMED	EA	2
C	17	44	PCHZZ	5330-115-6169	109X12T	45681	RETAINER, PACKING	EA	2
C	17	45	PAHZZ	5340-115-3059	1653-645214	45681	SPRING, RELIEF VALVE	EA	2
C	17	46	PCHZZ	2590-716-7914	104X117A	45681	PACKING, PREFORMED: SPRING GUIDE	EA	2
C	17	47	XBHZZ		1653-655670	45681	GUIDE, SPRING	EA	2
C	17	48	XBHZZ		1653-655666	45681	NUT, LOCK: SPRING GUIDE	EA	2
C	17	49	PAHZZ	5340-115-6142	41X21	45681	PLUG, EXPANSION: SPRING GUIDE	EA	2
C	17	50	XBHZZ		1653-645558	45681	SEAT, POPPET, LONG	EA	4
C	17	51	XBHZZ		1653-645730	45681	SEAT, MAKE-UP, CHECK	EA	1
C	17	52	XBHZZ		1653-645729	45681	CAP, LOAD CHECK VALVE	EA	1
C	17	53	XBHZZ		37X20	45681	NUT, ACORN: ADJUSTING SCREW	EA	1
C	17	54	PAHZZ	5330-601-4932	103X7	45681	SEAL, WASHER	EA	1
C	17	55	XBHZZ		17X5	45681	NUT, SELF-LOCKING, HEXAGON: ADJUSTING SCREW	EA	1
C	17	56	XBHZZ		27X638	45681	SCREW, ADJUSTING: MAIN RELIEF VALVE	EA	1
C	17	57	XBHZZ		1653-646722	45681	CAP, MAIN RELIEF	EA	1
C	17	58	PCHZZ	5330-927-4309	105X20L	45681	PACKING, PREFORMED	EA	1
C	17	59	PAHZZ	5340-115-1526	1653-636335	45681	SPRING, RELIEF VALVE	EA	1
C	17	60	PAHZZ		109X21ST	45681	RETAINER, PACKING	EA	1
C	17	61	PAHZZ	5330-115-3066	104X216A	45681	PACKING, PREFORMED: PLUNGER	EA	1
	17	62	PAHZZ	3805-134-9343	1653-655105	45681	PLUNGER: RELIEF VALVE	EA	1
C	17	63	PAHZZ	4810-168-1837	1653-636333	45681	SEAT, PLUNGER	EA	1
C	17	64	PAHZZ	5340-115-1525	1653-646718	45681	SPRING, RELIEF VALVE	EA	1
C	17	65	PAHZZ	2590-133-9979	1653-646717	45681	PLUNGER ASSEMBLY, RELIEF VALVE	EA	1
	17	66	PAHZZ	5306-225-8497	MS90725-32	96906	SCREW, MACHINE: RETAINER MTG	EA	2
C	17	67	PAHZZ		36X8	45681	WASHER, LOCK: RETAINER MTG	EA	6
C	17	68	XAHZZ		1653-645500	45681	SPOOL	EA	1
	17	69	PAHZZ	5305-753-4322	MS51095-334	96906	SCREW, MACHINE: RETAINER MTG	EA	2
C	17	70	XBHZZ		1653-656053	45681	EYE, SPOOL	EA	1
C	17	71	PAHZZ	5330-115-3072	109X16T	45681	RETAINER, PACKING	EA	1
C	17	72	PCHZZ	5330-984-3750	104X16A	45681	PACKING, PREFORMED	EA	1
C	17	73	XAHZZ		1653-675081	45681	RETAINER, EXTENSION	EA	1
	17	74	PAHZZ		MS51095-337	96906	SCREW, MACHINE: RETAINER MTG	EA	2
C	18	1	PAFZZ	5305-269-3250	MS90727-74	96906	SCREW, CAP, HEXAGON HEAD: VALVE MTG, 3/8-24 THD SIZE X 4 IN.	EA	2
	18	1	PAFZZ		920615-2	09367	SCREW, CAP, HEXAGON HEAD: VALVE MTG, 3/8-24 THD SIZE, 4 1/2 IN. LG	EA	1
C	18	2	PAFZZ	5310-080-6004	MS15795-14	96906	WASHER, FLAT: VALVE MTG	EA	3

	ILLUSTRATION (a) FIG NO.	(b) ITEM NO.	SMR CODE	FEDERAL STOCK NUMBER	PART NUMBER	FSCM	DESCRIPTION USABLE ON CODE	U/M	QTY IN UN
C	18	3	PAFZZ	5310-637-9541	MS35338-46	96906	WASHER, LOCK: VALVE MTG	EA	
C	18	4	PAFZZ	5310-543-5973	MS35691-625	96906	NUT, PLAIN, HEXAGON: VALVE MTG	EA	
C	18	5	PAFHH	4810-168-1835	DV13C1A20	02892	VALVE ASSEMBLY, DEMAND	EA	
C	19	1	XBHZZ		514X886	02892	PLUG, END	EA	
C	19	2	PCHZZ	5330-115-1468	A1008X222	02892	SEAL: END PLUG	EA	
C	19	3	XBHZZ		519X9	02892	PLUG, END	EA	
C	19	4	XAHZZ		454X103	02892	SPOOL	EA	
C	19	5	PAHZZ	3805-115-0514	513X42	02892	PLUNGER, SPOOL	EA	
C	19	6	PAHZZ		A501X303	02892	SPRING, PLUNGER	EA	
C	19	7	PAHZZ		A515X11	02892	RING, RETAINING	EA	
C	19	8	XBHZZ		560X194	02892	PLUG	EA	
C	19	9	PCHZZ	5330-012-0569	A395X12	02892	PACKING, PREFORMED: PLUG	EA	
C	19	10	XAHZZ		450X163	02892	HOUSING, VALVE	EA	
C	19	11	PAHZZ	4820-112-0078	414X173	02892	SEAT, VALVE	EA	
C	19	12	PAHZZ	4820-112-0077	422X63	02892	VALVE ASSEMBLY, RELIEF	EA	
	19	13	PAHZZ		A501X365	02892	SPRING: RELIEF VALVE	EA	
C	19	14	PAHZZ	5340-115-3058	A501X616	02892	SPRING, SPOOL	EA	
C	19	15	XBHZZ		830X536	02892	SPACER, SPOOL	EA	
C	19	16	PCHZZ	5330-115-1459	A848X64	02892	PACKING, PREFORMED: PLUG	EA	
C	19	17	XBHZZ		514X885	02892	PLUG, END	EA	
C	19	18	XBHZZ		519X8	02892	PLUG, HOUSING	EA	
C	19	19	PCHZZ	5330-228-2950	A1008X14	02892	PACKING, PREFORMED: PLUG	EA	
C	19	20	PAHZZ	5365-598-1070	5008-93	79136	RING, RETAINING: ORIFICE	EA	
C	19	21	PAHZZ	4730-114-0991	560X185	02892	PLUG, ORIFICE	EA	
C	19	22	PAHZZ		513X17	02892	PLUNGER, VALVE	EA	
C	19	23	PCHZZ	5330-115-1504	A1008X214	02892	PACKING, PREFORMED: END PLUG	EA	
C	20		PAFZZ	3805-807-8432	208866	80194	VALVE ASSEMBLY, RELIEF, BUCKET CLAMP	EA	
N	20	1	XBFZZ		70417	80194	CAP, VALVE SCREW	EA	
N	20	2	PCFZZ		70418	80194	GASKET: CAP	EA	
N	20	3	XBFZZ		79227	80194	SCREW, VALVE ADJUSTING	EA	
N	20	4	XBFZZ		79226	80194	SPRING, HELICAL, COMPRESSION	EA	
N	20	5	PCFZZ		61453	80194	PACKING, PREFORMED	EA	
N	20	6	PCFZZ		80991	80194	PACKING, PREFORMED	EA	
N	20	7	XBFZZ		79225	80194	PLUNGER: WITH SEAT	EA	
N	20	8	PCFZZ		79228	80194	PACKING, PREFORMED	EA	
N	20	9	PCFZZ		79229	80194	PACKING, PREFORMED	EA	
N	20	10	PAFZZ		7874	80194	PLUG, PIPE	EA	
N	20	11	XAFZZ		981280	80194	BODY, VALVE	EA	
C	21	1	PAOZZ	5305-042-6417	MS90725-113	96906	SCREW, CAP, HEXAGON HEAD: PUMP MTG	EA	
C	21	2	PAOZZ	5310-010-3323	MS35338-10	96906	WASHER, LOCK: PUMP MTG	EA	
C	21	3	PAOHH	3805-010-0204	D230-29	13829	PUMP ASSEMBLY, HYDRAULIC	EA	

ILLUSTRATION (a) FIG NO.	(b) ITEM NO.	SMR CODE	NATIONAL STOCK NUMBER	PART NUMBER	FSCM	DESCRIPTION USABLE ON CODE	U/M	QTY INC IN UNIT
22	1	PAHHH	3805-00-134-9344	0230-29P508278	13829	COVER ASSEMBLY, PUMP	EA	1
22	2	PCHZZ	2815-00-920-6849	X73-37-17	13829	SEAL, PLAIN, ENCASED: COVER	EA	1
22	3	PAHZZ		X30-26	13829	SETSCREW: COVER	EA	1
22	4	XAHZZ		K81685-3	13829	COVER, PUMP	EA	1
22	5	PCHZZ		3053765-8	92392	SEAL, BEARING	EA	1
22	6	PAHZZ	3110-00-051-0868	AJ28922	80648	BEARING, ROLLER: PUMP SHAFT	EA	2
22	7	PAHZZ	2590-00-133-9977	Y1058-1	13829	PLATE, THRUST: GEAR	EA	1
22	8	PAHZZ	5330-00-809-1052	BA3026-1	92392	STRIP, SEAL: THRUST PLATE	EA	V
22	9	PAHZZ	3805-00-110-9697	P01135M3	13829	GEAR SET, PUMP	EA	1
22	10	PCHZZ		UB3000-24	13829	PACKING, PREFORMED: HOUSING TO COVER	EA	4
22	11	XAHZZ		MA1688-26	13829	HOUSING, PUMP	EA	2
22	12	PAHZZ	3830-00-789-8425	Y1058	13829	PLATE, THRUST	EA	3
22	13	PAHZZ	3805-00-134-9345	0230-29D	13829	CARRIER ASSEMBLY, BEARING	EA	1
22	14	PAHZZ		AJ28922	80648	BEARING, ROLLER: CARRIER	EA	4
22	15	XAHZZ		TA1687-11	13829	CARRIER: BEARING	EA	1
22	16	PAHZZ		MS35690-1005	96906	NUT, PLAIN, HEXAGON: PUMP CLAMPING	EA	4
22	17	PAHZZ	5307-00-404-4782	AE1402-10	13829	STUD, PLAIN: PUMP CLAMPING	EA	4
22	18	PAHZZ		X144-3	79807	WASHER, FLAT: PUMP CLAMPING	EA	4
22	19	XAHZZ		D230-2981	13829	COVER ASSEMBLY, PORT	EA	1
22	20	XAHZZ		ZA1603	13829	COVER, PORT	EA	1
22	21	PAHZZ	3110-00-051-0868	AJ28922	80648	BEARING, ROLLER: SHAFT	EA	2
22	22	PAHZZ	3020-00-114-0917	MA1006M15	13829	GEAR, SET, PUMP	EA	1
22	23	PAHZZ	2590-00-133-9978	YA1133	13829	SHAFT, CONNECTING	EA	1
						GROUP 05 - LIGHTS		
23	1	PA000	6220-00-337-6471	8378786	00000	LAMP UNIT, TAIL, BLACKOUT	EA	1
23	2	PA0ZZ	6220-00-752-6018	7526018	00000	DOOR ASSEMBLY LIGHT	EA	1
23	3	PC0ZZ		7320658	00000	GASKET: DOOR	EA	1
23	4	PA0ZZ	6240-00-019-0877	190877	00000	LAMP, INCANDESCENT	EA	2
23	5	PA0ZZ	6250-00-353-0955	8378662	00000	SOCKET ASSEMBLY, LAMP	EA	1
23	6	PA0ZZ		MS35206-242	96906	SCREW, MACHINE: SOCKET MTG	EA	4
23	7	PA0ZZ		121841	00000	WASHER, LOCK: SOCKET MTG	EA	4
23	8	XA0ZZ	6220-00-368-4945	7525997	19207	BODY, LIGHT	EA	1
23	9	PA0ZZ		904206-0	92392	WASHER, LOCK; LAMP MTG, 3/8 IN. ID	EA	2
23	10	PA0ZZ		915408-9	92392	SCREW, MACHINE: LAMP MTG, 3/8-16 X 3/4 IN. LG	EA	2
24	1	PA000	6220-00-904-0156	10920548-2	00000	LIGHT, PARKING AND TURN, W/AMBER LENS COVER (ALL OTHER COMPONENTS SAME AS LAMP, NSN 6220-00-880-1237)	EA	2
24	1	PA000	6220-00-880-1237	10920548-1	19207	LAMP UNIT, STOP, TURN AND TAIL W/RED LENS COVER	EA	2
24	2	PA0ZZ		3057688-8	92392	LENS, COVER AMBER (COMPONENT OF LIGHT, NSN 6220-00-904-0156)	EA	4
24	2	PA0ZZ	6220-00-903-6647	10920506	19207	LENS, COVER, RED (COMPONENT OF LAMP UNIT, NSN 6220-00-880-1237)	EA	2
24	3	PC0ZZ	6220-00-732-0658	7320658	00000	GASKET: LENS	EA	4
24	4	PA0ZZ	6240-00-295-2668	MS35478-1691	96906	LAMP, INCANDESCENT	EA	4
24	5	PA0ZZ	5935-00-111-8416	10930019	00000	SOCKET ASSEMBLY, LAMP	EA	4

ILLUSTRATION (a) FIG NO.	(b) ITEM NO.	SMR CODE	FEDERAL STOCK NUMBER	PART NUMBER	FSCM	DESCRIPTION USABLE ON CODE	U/M
C 24	6	XAOZZ	6220-368-4945	7525997	00000	BODY, LIGHT	EA
C 24	7	PAOZZ	5305-012-1832	121832	00000	SCREW, MACHINE: SOCKET WIRING MTG	EA
C 24	8	PAOZZ	5310-045-3299	MS35338-42	96906	WASHER, LOCK: SOCKET MTG	EA
C 24	9	PAOZZ	5305-899-3002	MS35206-242	96906	SCREW, MACHINE: SOCKET MTG	EA
C 24	10	PAOZZ	6240-044-6914	MS35478-1683	96906	LAMP, INCANDESCENT	EA
C 24	11	PAOZZ	5310-261-7340	904206-0	92392	WASHER, LOCK: LIGHT MTG, 3/8 IN. ID	EA
C 24	12	PAOZZ	5305-269-3209	MS90725-58	96906	SCREW, MACHINE: LIGHT MTG, 3/8-16 X 3/4 IN. LG	EA
C 25	1	PA000	6220-678-9046	MS51318-1	96906	LAMP UNIT, BLACKOUT	EA
C 25	2	PAOZZ	6220-695-1107	7525940	00000	DOOR ASSEMBLY	EA
C 25	3	XAOZZ	6220-819-7028	8747987	00000	UNIT AND WIRE ASSEMBLY	EA
C 25	4	XAOZZ	5935-572-9180	8338966	00000	SHELL, CONNECTOR	EA
C 25	5	XAOZZ	5310-833-8967	8338967X	00000	WASHER	EA
C 25	6	XAOZZ	5325-088-6147	8741442	00000	GROMMET	EA
C 25	7	XAOZZ	5935-807-4109	8741492	00000	CONNECTOR ASSEMBLY	EA
C 25	8	XAOZZ		8747986	00000	BODY ASSEMBLY, LIGHT	EA
C 25	9	PAOZZ	5310-350-2655	5294507	00000	WASHER, BEVEL	EA
C 25	10	PAOZZ		904206-0	92392	WASHER, LOCK: LIGHT MTG, 3/8 IN. ID	EA
C 25	11	PAOZZ		134566	00000	NUT, PLAIN, HEXAGON: LIGHT MTG, 3/8-16 THD SIZE	EA
C 25	12	XAOZZ	6220-693-4175	7320711	00000	SPRING: LAMP UNIT	EA
C 26	1	PA000	6220-953-4652	M12874	74400	LAMP UNIT, FLOODLIGHT (COMPONENTS SAME AS LAMP UNIT, FSN 6220-953-4653)	EA
C 26	1	PA000	6220-953-4653	M12876	74400	LAMP UNIT, HEADLIGHT	EA
C 26	2	XAOZZ	3930-828-3556	6081	74400	SHELL ASSEMBLY, LIGHT	EA
C 26	3	XAOZZ	6220-788-9943	5133	74400	RETAINER: LAMP	EA
C 26	4	PAOZZ	6240-643-0687	4578	92392	LAMP, INCANDESCENT: FLOOD LIGHT (U/O LAMP UNIT, FSN 6240-111-3213, ONLY)	EA
C 26	4	PAOZZ	6240-727-8573	4880	90940	LAMP, INCANDESCENT: HEADLIGHT (U/O LAMP UNIT, FSN 6620-953-4653, ONLY)	EA
C 26	5	XBOZZ		3051070-5	92392	SPACER: LIGHT MTG	EA
C 26	6	PAOZZ	5310-820-6653	MS35338-12	96906	WASHER, LOCK: LIGHT MTG, 5/8 IN. ID	EA
C 26	7	PAOZZ	5310-777-6325	MS51972-7	96906	NUT, PLAIN, HEXAGON: LIGHT MTG, 5/8-18 THD SIZE	EA
C 27	1	PAOZZ	2590-050-8821	5703317	19207	SWITCH, DIRECTIONAL	EA
C 27	2	PAOZZ	5310-045-3296			WASHER, LOCK: DIRECTIONAL SWITCH MTG, NO. 10 SCREW SIZE, INTERNAL TEETH	EA
C 27	3	PAOZZ	5305-042-4506			SCREW, MACHINE: DIRECTIONAL SWITCH MTG, NO. 10-32 THD SIZE, 1/2 IN. LG	EA
C 28	1	PAOZZ	5305-267-8977	MS90726-10	96906	SCREW, CAP, HEXAGON HEAD: HORN MTG, 1/4-28 THD SIZE, 1 1/4 IN. LG	EA
C 28	2	PAOZZ	2590-752-6286	765	90218	HORN	EA
C 28	3	PAOZZ	5310-502-5965	904204-5	92392	WASHER, LOCK: HORN MTG, 1/4 IN. SCREW SIZE	EA
C 28	4	PAOZZ		MS35690-425	96906	NUT, PLAIN, HEXAGON: HORN MTG, 1/4-28 THD SIZE	EA
C 28		XBOZZ		3052090-2.	92392	WIRE ASSEMBLY, HORN	EA
C 29	1	PAOZZ	5310-080-6004	MS15795-14	96906	WASHER, FLAT: BATTERY HOLD-DOWN, 3/8 IN. ID	EA
29	2	PAOZZ	5310-543-4717	MS35425-28	96906	NUT, PLAIN, WING: BATTERY HOLD-DOWN, 3/8-16 THD SIZE	EA

(1) ILLUSTRATION (a) FIG NO.	(1) ILLUSTRATION (b) ITEM NO.	(2) SMR CODE	(3) NATIONAL STOCK NUMBER	(4) PART NUMBER	(5) FSCM	(6) DESCRIPTION USABLE ON CODE	(7) U/M	(8) QTY INC IN UNIT
29	3	PAOZZ	2920-00-983-6643	642869-2	90940	BRACKET, BATTERY HOLD-DOWN	EA	1
29	4	PAOZZ		MS75004-2	96906	LUG, BATTERY	EA	2
29	5	PAOZZ	6140-00-135-0223	3050918-6	92392	CABLE, JUMPER	EA	1
29	6	PAOZZ	5940-00-246-4891	3029291-6	92392	LUG, BATTERY	EA	2
29	7	PAOZZ	6140-00-135-0225	3050917-8	92392	CABLE ASSEMBLY, NEGATIVE	EA	1
29	8	XBOZZ		3052169-4	92392	CLAMP: BATTERY CABLE	EA	1
29	9	PAOZZ	5310-00-010-3323	904208-6	92392	WASHER, LOCK: CABLE CLAMP	EA	1
29	10	PAOZZ	5305-00-781-3924	MS90725-107	96906	SCREW, CAP, HEXAGON HEAD: CABLE CLAMP	EA	1
29	11	XBOZZ		3050997-0	92392	BOX ASSEMBLY, BATTERY	EA	1
29	12	PAOZZ	5305-00-269-3209	MS90725-58	96906	SCREW, CAP, HEXAGON HEAD: BATTERY BOX COVER, 3/8-16 THD SIZE, 3/4 IN. LG	EA	3
29	13	PAOZZ	2920-00-133-9891	3050923-6	92392	COVER ASSEMBLY	EA	1
29	14	PAOZZ	5310-00-261-7340	904206-0	92392	WASHER, LOCK: COVER MTG, 3/8 IN. ID	EA	3
29	15	PAOZZ	5310-00-012-0377	MS35690-605	96906	NUT, PLAIN, HEXAGON: COVER MTG, 3/8-16 THD SIZE	EA	3
29	16	PAOZZ	3805-00-454-8102	3043841-0	92392	LATCH: COVER	EA	2
29	17	PAOZZ		923703-3	92392	SCREW, SELF-TAPPING: LATCH MTG, NO. 10-32 THD SIZE, 1/2 IN. LG	EA	4
29	18	PAOZZ	5306-00-089-1530	917340-2	92392	BOLT, SQUARE NECK: BATTERY HOLD-DOWN, 3/8-16 THD SIZE, 9 IN. LG	EA	5
29	19	PCOZZ		3050914-5	92392	CHANNEL, RUBBER: BATTERY CABLE	EA	1
29	20	PAOZZ		MS35690-605	96906	NUT, PLAIN, HEXAGON: BATTERY BOX MTG, 3/8-16 THD SIZE	EA	4
29	21	PAOZZ	5310-00-261-7340	904206-0	92392	WASHER, LOCK: BATTERY BOX MTG, 3/8 IN. ID	EA	4
29	22	PAOZZ	5310-00-186-7448	MS15795-14	96906	WASHER, FLAT: BATTERY BOX MTG, 3/8 IN. ID	EA	4
29	23	PAOZZ	5305-00-558-4901	MS35301-62	96906	SCREW, CAP, HEXAGON HEAD: BATTERY BOX MTG, 3/8-16 THD SIZE, 1 1/4 IN. LG	EA	4
29	24	PAOZZ	6140-00-135-0224	3050916-0	92392	CABLE ASSEMBLY, POSITIVE	EA	1
29	25	PAOZZ	6140-00-057-2554	MS35000-3	96906	BATTERY: 12 VOLT	EA	2
29	26	PCOZZ		3050915-2	92392	CHANNEL, RUBBER: BATTERY CABLE	EA	1
29		PAOZZ	6810-00-249-9354			ELECTROLYTE	GL	2
						GROUP 06 - HOOD, PANELS, SEAT, TOOL BOX		
		KDHZZ		13220E6585-2	97403	KIT ASSEMBLY, ROLL-OVER PROTECTION	EA	1
		PDHHL		V2012	34229	RETROFIT KIT, ROLL-OVER PROTECTION	EA	1
29A	1	KEOZZ		700X11	34229	SUB ASSEMBLY	EA	1
29A	2	KEHZZ		702W11	34229	DECK PLATE, RIGHT HAND	EA	1
29A	3	KFHZZ		702W12	34229	DECK PLATE, LEFT HAND	EA	1
29A	4	KFHZZ		702W13LH	34229	BRACKET, FRONT LEFT HAND	EA	1
29A	4	KFHZZ		702W13RH	34229	BRACKET, FRONT RIGHT HAND	EA	1
29A	5	KFHZZ		702W14LH	34229	BRACKET, REAR LEFT HAND	EA	1
29A	5	KFHZZ		702W14RH	34229	BRACKET, REAR RIGHT HAND	EA	1
29A	6	KFHZZ		788X18-4	34229	BASE, RUBBER MOUNT	EA	4
29A	7	PBOZZ		788X18-3	34229	INSERT, RUBBER MOUNT	EA	8
29A	8	PBOZZ		788X18-5	34229	BUSHING, RUBBER MOUNT	EA	4
29A	9	PBOZZ		1616-2TAA	34229	SCREW, CAP, SAE GR8 1-8 THD SIZE, 6.5 IN LG	EA	4
29A	10	PBOZZ		1111-16AA	34229	NUT, SAEGR8, 1-8 THD SIZE	EA	4

(1) ILLUSTRATION (a) FIG NO.	(b) ITEM NO	(2) SMR CODE	(3) NATIONAL STOCK NUMBER	(4) PART NUMBER	(5) FSCM	(6) DESCRIPTION USABLE ON CODE	(7) U/M	(8) QT INC IN UNI
29A	11	PB0ZZ		1216-4	34229	WASHER, SHAKE PROOF, 1 IN. ID	EA	4
29A	12	PB0ZZ	5305-00-269-3216	1606-9AA	34229	SCREW, CAP, 3/8-16 THD SIZE, 2 IN. LG	EA	4
29A	13	PB0ZZ	5310-00-056-3395	1111-6AA	34229	NUT, 3/8-16 THD SIZE	EA	4
29A	14	PB0ZZ	5310-00-820-6652	1210-6	34229	WASHER, LOCK, 3/8 IN. ID	EA	4
29A	15	KF0ZZ		702W15	34229	ANGLE, SUPPORT FENDER	EA	2
29A	16	PB0ZZ		780V65	34229	TAPE, NON-SLIP BLACK, 1 IN. X 20 FT, ROLL	EA	1
	17	PB0ZZ		780V72	34229	PLATE, INSTRUCTION	EA	1
29B	1	PB0ZZ		43115	29944	BELT, SEAT ASSEMBLY	EA	1
29B	2	KFHZZ		780V79	34229	BRACKET, SEAT BELT SET OF 2	ST	1
	3	PB0ZZ		13220E6588	97403	PLATE, DATA TRANSPORTATION	EA	1
	4	PB0ZZ	5305-00-253-5615	MS21318-21	96906	SCREW, DRIVE, ROUND HEAD STEEL NO 4 X 0.25 IN. LG	EA	4
30	1	PA0ZZ		MS35691-625	96906	NUT, PLAIN, HEXAGON: HOOD MTG, 3/8-24 THD SIZE	EA	2
30	2	PA0ZZ	5310-00-637-9541	MS35338-46	96906	WASHER, LOCK: HOOD MTG, 3/8 IN. ID	EA	2
30	3	PA0ZZ	5310-00-186-7448	MS15795-14	96906	WASHER, FLAT: HOOD MTG, 3/8 IN. ID	EA	2
30	4	PA0ZZ	5305-00-269-2803	MS90726-60	96906	SCREW, CAP, HEXAGON HEAD: HOOD MTG, 3/8-24 THD SIZE, I IN. LG	EA	2
30	5	XB0ZZ		3045858-2	92392	HOOD, ENGINE	EA	1
30	6	PA0ZZ	5305-00-206-0996	171123	24617	SCREW, SELF-TAPPING: COVER PLATE MTG, 3/8-16 THD SIZE, 3/4 IN. LG	EA	8
30	7	XB0ZZ		3051036-6	92392	PLATE, COVER, LIGHT: RH	EA	2
30	7	XB0ZZ		3051037-4	92392	PLATE, COVER, LIGHT: LH	EA	2
30	8	XB0ZZ	3805-00-762-1619	3051023-4	92392	GRILLE, RADIATOR	EA	1
30	9	XB0ZZ		3042646-4	92392	CLAMP: GRILLE	EA	4
30	10	PA0ZZ	5310-00-637-9541	MS35338-46	96906	WASHER, LOCK: GRILLE MTG, 3/8 IN. ID	EA	4
30	11	PA0ZZ	5310-00-269-3215	MS90725-65	96906	SCREW, CAP, HEXAGON HEAD: GRILLE MTG, 3/8-16 THD SIZE, 1 3/4 IN. LG	EA	4

ILLUSTRATION (a) FIG NO.	(b) ITEM NO.	SMR CODE	FEDERAL STOCK NUMBER	PART NUMBER	FSCM	DESCRIPTION USABLE ON CODE	U/M	QTY ING IN UNIT
30	12	PAOZZ		MS90727-165	96906	SCREW, CAP, HEXAGON HEAD: SUPPORT MTG, 5/8-18 THD SIZE, 2 1/4 IN. LG	EA	4
30	13	PAOZZ		MS27183-22	96906	WASHER, FLAT: SUPPORT MTG, 5/8 IN. ID	EA	4
30	14	PAOZZ	5310-982-6809	MS10414N10	96906	NUT, SELF-LOCKING, HEXAGON: SUPPORT MTG, 5/8-18 THD SIZE	EA	4
30	15	XBFZZ		3051079-6	92392	SUPPORT, RADIATOR	EA	1
30	16	XBOZZ	2510-423-0272	3052133-0	92392	FENDER, FRONT, RIGHT	EA	1
30	16	XBOZZ	2510-427-5689	3052132-2	92392	FENDER, FRONT, LEFT	EA	1
30	17	PAOZZ	5305-725-4187	MS90726-14	96906	SCREW, CAP, HEXAGON HEAD: FENDER MTG, 1/2-13 THD SIZE, 1 3/4 IN. LG	EA	12
30	18	PAOZZ	5310-010-3323	MS35338-10	96906	WASHER, LOCK: FENDER MTG, 1/2 IN. ID	EA	12
30	19	PAOZZ	5310-265-9217	MS35690-825	96906	NUT, PLAIN, HEXAGON: FENDER MTG, 1/2-20 THD SIZE	EA	12
30	20	XBOZZ		3043474-0	92392	FENDER, LEFT	EA	1
30	20	XBOZZ	3805-256-2643	3043475-7	92392	FENDER, RIGHT	EA	1
30	21	PAOZZ	5310-543-5973	MS35691-625	96906	NUT, PLAIN, HEXAGON: FENDER MTG, 3/8-24 THD SIZE	EA	6
30	22	PAOZZ	5310-637-9541	MS35338-46	96906	WASHER, LOCK: FENDER MTG, 3/8 IN. ID	EA	6
30	23	PAOZZ	5310-080-6004	MS15795-14	96906	WASHER, FLAT: FENDER MTG, 3/8 IN. ID	EA	6
30	24	XBOZZ		3044879-9	92392	SUPPORT, FENDER	EA	2
30	25	PAOZZ	5310-543-5973	MS35691-625	96906	NUT, PLAIN, HEXAGON: SHIELD MTG, 3/8-24 THD SIZE	EA	4
30	26	PAOZZ	5310-637-9541	MS35338-46	96906	WASHER, LOCK: SHIELD MTG, 3/8 IN. ID	EA	4
30	27	PAOZZ	5310-080-6004	MS15795-14	96906	WASHER, FLAT: SHIELD MTG, 3/8 IN. ID	EA	4
30	28	PAOZZ	5305-269-2803	MS90726-60	96906	SCREW, CAP, HEXAGON HEAD: FENDER MTG, 3/8-24 THD SIZE, 1 IN. LG	EA	6
30	29	PAOZZ	5305-269-2803	MS90726-60	96906	SCREW, CAP, HEXAGON HEAD: SHIELD MTG, 3/8-24 THD SIZE, 1 IN. LG	EA	4
30	30	PAOZZ	5305-269-2803	MS90726-60	96906	SCREW, CAP, HEXAGON HEAD: GRAB HANDLE MTG, 3/8-24 THD SIZE, 1 IN. LG	EA	2
30	31	XBOZZ		3052024-1	92392	HANDLE, GRAB	EA	1
30	32	PAOZZ		MS35338-46	96906	WASHER, LOCK: GRAB HANDLE MTG, 3/8 IN. ID	EA	2
30	33	PAOZZ	5310-543-5973	MS35691-625	96906	NUT, PLAIN, HEXAGON: GRAB HANDLE MTG, 3/8-24 THD SIZE	EA	2
30	34	XBOZZ	2510-423-0343	3052085-2	92392	SHIELD, AIR CLEANER	EA	1
30	35	PAOZZ	2540-115-0512	4354836-1	92392	LATCH, FENDER	EA	2
31	1	PAOZZ	5310-543-5973	MS35691-625	96906	NUT, PLAIN, HEXAGON: HANDRAIL MTG, 3/8-24 THD SIZE	EA	3
31	2	PAOZZ	5310-637-9541	MS35338-46	96906	WASHER, LOCK: HANDRAIL MTG, 3/8 IN. ID	EA	11
31	3	PAOZZ	5305-269-2803	MS90726-60	96906	SCREW, CAP, HEXAGON HEAD: HANDRAIL MTG, 3/8-24 THD SIZE, 1 IN. LG	EA	3
31	4	XBOZZ		3044236-2	92392	HANDRAIL	EA	1
31	5	PAOZZ	5310-012-0377	MS35690-605	96906	NUT, PLAIN, HEXAGON: LADDER MTG, 3/8-16 THD SIZE	EA	4
31	6	PAOZZ	5305-269-3211	MS90725-60	96906	SCREW, CAP, HEXAGON HEAD: LADDER MTG, 3/8-16 THD SIZE, 1 IN. LG	EA	4
31	7	PAOZZ		MS90726-66	96906	SCREW, CAP, HEXAGON HEAD: 3/8-24 THD SIZE, 2 IN. LG	EA	2
31	8	PAOZZ	5310-209-0691	MS15795-15	96906	WASHER, FLAT: LADDER MTG, 3/8 IN. ID	EA	4
31	9	XBOZZ		3047952-1	92392	LADDER, ACCESS	EA	1
31	10	XBOZZ		3045234-6	92392	BRACKET, LADDER SUPPORT	EA	1
32	1	XBOZZ		3051702-3	92392	BOX, TOOL	EA	1
32	2	PAOZZ	3805-454-8102	3043841-0	92392	LATCH, TOOL BOX	EA	1
32	3	PAOZZ		172378	00000	SCREW, SELF-TAPPING: TOOL BOX LATCH	EA	2
32	4	PAOZZ	5305-269-3209	MS90725-58	96906	SCREW, CAP, HEXAGON HEAD: TOOL BOX MTG, 3/8-16 THD SIZE, 3/4 IN. LG	EA	4

	(1) ILLUSTRATION (a) FIG NO.	(b) ITEM NO.	(2) SMR CODE	(3) FEDERAL STOCK NUMBER	(4) PART NUMBER	(5) FSCM	(6) DESCRIPTION USABLE ON CO
C	32	5	PAOZZ	5310-080-6004	MS15795-14	96906	WASHER, FLAT: TOOL BOX MTG, 3/8 IN. ID
C	32	6	PAOZZ	5310-637-9541	MS35338-46	96906	WASHER, LOCK: TOOL BOX MTG, 3/8 IN. ID
C	33	1	PA000	2540-190-9799	D827-61	76359	SEAT ASSEMBLY
C	33	2	PAOZZ	2540-960-9403	C2106	76359	CUSHION, BACK
C	33	3	XAOZZ		C2080-88	76359	SHELL ASSEMBLY, SEAT
C	33	4	PAOZZ	5305-269-3208	MS90725-57	96906	SCREW, CAP, HEXAGON HEAD: SEAT CUSHION
C	33	5	PAOZZ	5310-080-6004	MS27183-14	96906	WASHER, FLAT: SEAT CUSHION
C	33	6	PAOZZ	5360-660-0667	E2860	76359	SPRING
C	33	7	PAOZZ	2540-960-9404	C2032	76359	CUSHION, SEAT
C	33	8	PAOZZ	5306-225-9089	MS90726-34	96906	BOLT, MACHINE: SEAT MTG, 5/16-24 THD SIZE, 1 IN. LG
C	33	9	XBOZZ		3045983-8	92392	SUPPORT, LEFT
C	33	10	PAOZZ	5310-010-3320	MS35338-7	96906	WASHER, LOCK: SEAT MTG, 5/16 IN. ID
C	33	11	PAOZZ		MS35690-522	96906	NUT, PLAIN, HEXAGON: SEAT MTG, 5/16-24 THD SIZE
C	33	12	PAOZZ	5305-269-2805	MS90726-62	96906	SCREW, CAP, HEXAGON HEAD: SUPPORT MTG, 3/8-24 THD SIZE, 1 1/4 IN. LG
C	33	13	PAOZZ	5310-209-0691	MS15795-15	96906	WASHER, FLAT: SUPPORT MTG, 13/32 IN. ID, 1 IN. OD
C	33	14	PAOZZ	5310-637-9541	MS35338-46	96906	WASHER, LOCK: SUPPORT MTG, 3/8 IN. ID
C	33	15	PAOZZ	5310-543-5973	MS35691-625	96906	NUT, PLAIN, HEXAGON: SUPPORT MTG, 3/8-24 THD SIZE
C	33	16	XAOZZ		3045983	92392	SUPPORT, SEAT, LEFT
C	33	17	PAOZZ	5310-899-9151	MS51967-13	96906	NUT, PLAIN, HEXAGON: SUPPORT MTG
C	33	18	PAOZZ	5310-010-3323	MS35338-10	96906	WASHER, LOCK: SUPPORT MTG
C	33	19	XAOZZ		3045984	92392	SUPPORT, SEAT, RIGHT
C	33	20	PAOZZ		MS15795-19	96906	WASHER, FLAT: SUPPORT MTG
C	33	21	PAOZZ	5305-042-6417	MS90725-113	96906	SCREW, CAP, HEXAGON HEAD: SUPPORT MTG
C	33	22	PAOZZ		3045984-6	92392	SUPPORT, RIGHT
C	34	1	XBOZZ		3051067-1	92392	COWL, FRONT
C	34	2	XBOZZ		3050403	92392	COVER, STEERING GEAR, FRONT
C	34	3	PAOZZ	5305-008-2084	171123	24617	SCREW, CAP, SELF-TAPPING, HEXAGON HEAD: 3/8-16 THD SIZE X 3/4 IN. LG, STEERING GEAR COVER
C	34	4	PAOZZ	5310-543-5973	MS35691-625	96906	NUT, PLAIN, HEXAGON: FRONT COWL MTG AND COVER MTG
C	34	5	PAOZZ	5310-261-7340	MS35338-8	96906	WASHER, LOCK: FRONT COWL MTG AND COVER MTG
C	34	6	PAOZZ	5310-087-7493	MS15795-14	96906	WASHER, FLAT: FRONT COWL MTG AND COVER MTG
C	34	7	PAOZZ		MS90726-34	96906	SCREW, SELF-TAPPING, HEXAGON HEAD: FRONT COWL MTG, 3/8-16 THD SIZE X 3/4 IN. LG
C	34	8	XBOZZ		3050402	92392	COVER, STEERING GEAR, REAR
C	34	9	XBFZZ		3052500-0	92392	PLATFORM ASSEMBLY: OPERATOR
C	34	10	XBOZZ				COVER, ACCESS, CONTROL VALVE
C	34	11	PAOZZ		920651-7	92392	SCREW, SELF-TAPPING, PANHEAD: ACCESS COVER MTG
C	34	12	PAOZZ	5305-725-4105	MS90726-164	96906	SCREW, CAP, HEXAGON HEAD: PLATFORM MTG
C	34	13	PAFZZ	5310-982-6809	MS21044LN10	96906	NUT, PLAIN, HEXAGON: PLATFORM MTG
C	34	14	PAFZZ	5310-823-8803	MS15795-20	96906	WASHER, FLAT: PLATFORM MTG
C	34	15	PAFZZ	5305-725-4133	MS90726-168	96906	SCREW, CAP, HEXAGON HEAD: PLATFORM MTG
C	34	16	XBOZZ		3052323-7	92392	PLATE, COVER, MASTER CYLINDER: LEFT

	(a) FIG. NO.	(b) ITEM NO.	SMR CODE	FEDERAL STOCK NUMBER	PART NUMBER	FSCM	DESCRIPTION USABLE ON CODE	U/M
C	34	17	XB0ZZ	5305-269-3209	MS90725-58	96906	SCREW, CAP, HEXAGON HEAD; COVER MTG	EA
C	34	18	XB0ZZ	3805-140-3862	3024079-9	92392	COVER ASSEMBLY, MASTER CYLINDER FILL	EA
C	35	1	PA0ZZ	9905-205-2795	MS35387-1	96906	REFLECTOR, RED LENS	EA
C	35	2	PA0ZZ		172427	00000	SCREW, SELF-TAPPING; REFLECTOR MTG	EA

(1) ILLUSTRATION (a) FIG NO.	(b) ITEM NO.	(2) SMR CODE	(3) NATIONAL STOCK NUMBER	(4) PART NUMBER	(5) FSCM	DESCRIPTION USABLE ON CODE	U/M	QTY INC IN UNIT
						GROUP 07 - RADIATOR, GUARDS AND HOSES		
36	1	XBOZZ		3052485-4	92392	TUBE, RADIATOR INLET	EA	1
36	2	PCOZZ	4720-00-110-1944	3043082-1	92392	HOSE, INLET TUBE	EA	2
36	3	PAOZZ	4730-00-845-5449	36P	66295	CLAMP, HOSE: INLET AND OUTLET HOSE	EA	8
36	4	PAOFF	2930-00-459-7018	73059575	92392	RADIATOR	EA	1
36	5	PAOZZ	2930-00-358-5960	73007198	92392	CAP, RADIATOR	EA	1
36	6	PAOZZ		MS35298-116	96906	SCREW, CAP, HEXAGON HEAD: RADIATOR MTG, 1/2-20 THD SIZE, 2 1/4 IN LG	EA	4
36	7	PAOZZ	5340-00-446-3269	J6642-7	76005	MOUNT, RUBBER: RADIATOR	EA	4
36	8	PAOZZ		3032335-6	92392	WASHER, FLAT: RADIATOR MTG, 1/2 IN. ID	EA	4
36	9	PAOZZ	5310-00-209-0693	MS15795-19	96906	WASHER, LOCK: RADIATOR MTG, 1/2 IN. ID	EA	4
36	10	PAOZZ		MS21044N8	96906	NUT, SELF-LOCKING, HEXAGON: RADIATOR MTG, 1/2-20 THD SIZE	EA	4
36	11	PAOZZ	4820-00-112-0072	925486-3	92392	COCK, DRAIN: RADIATOR	EA	1
36	12	XBOFF		3042641-5	92392	GRILLE, METAL, FAN GUARD	EA	1
36	13	PCOZZ	4720-00-110-1946	3052487-0	92392	HOSE, OUTLET TUBE	EA	1
36	14	PAOZZ	5305-00-269-3214	MS90725-64	96906	SCREW, CAP, HEXAGON HEAD: GUARD MTG, 3/8-16 THD SIZE, 1 1/2 IN. LG	EA	4
36	15	PAOZZ	5310-00-209-0691	MS15795-15	96906	WASHER, FLAT: GUARD MTG, 3/8 IN. ID, 13/32 IN. THK, 1 IN. OD	EA	4
36	16	PAOZZ		29N1516	92962	NUT, FLANGE: GUARD MTG, 3/8-16 THD SIZE	EA	4
						GROUP 08 - ENGINE ASSEMBLY		
37	1	PAFHH	2815-00-494-9334	4027601-6	09367	ENGINE, DIESEL, TYPE 1	EA	1
37	2	PAFZZ	5305-00-725-4183	MS90726-113	96906	SCREW, CAP, HEXAGON HEAD: ENGINE MTG	EA	6
37	3	XBFZZ		3044879-0	92392	SHIM, ENGINE MTG	EA	V
37	4	XBFZZ		3043878-2	92392	BLOCK, ENGINE MTG	EA	2
37	5	PAFZZ	5310-00-677-5795	MS21044N8	96906	NUT, SELF-LOCKING, HEXAGON: MTG	EA	6
37	6	XBFZZ		3044877-3	92392	BRACKET: MOUNTING, LEFT	EA	1
37	6	XBFZZ		3044878-1	92392	BRACKET: MOUNTING, RIGHT	EA	1
37	7	PAFZZ	5305-00-725-4133	MS90726-168	96906	SCREW, CAP, HEXAGON HEAD: ENGINE MTG	EA	4
37	8	PAFZZ	5310-00-951-7209	3026389-3	92392	WASHER, FLAT: ENGINE MTG	EA	4
37	9	PAFZZ	5310-00-982-6809	MS21044LN10	96906	NUT, SELF-LOCKING, HEXAGON: ENGINE MTG	EA	4
						GROUP 09 - AIR CLEANER AND TURBOCHARGER		
38	1	PAOZZ	2940-00-112-7804	RBX00-2226	18265	INDICATOR ASSEMBLY: AIR CLEANER	EA	1
38	2	PAOZZ		121902	00000	NUT, PLAIN, HEXAGON: FLANGE MTG, 1/4 ID, 28 THD SIZE	EA	2
38	3	PAOZZ	5310-00-010-3319	904204-5	92392	WASHER, LOCK: FLANGE MTG, 1/4 IN. ID	EA	2
38	4	PAOZZ	3930-00-069-3519	P10-5168	18265	FLANGE, MOUNTING	EA	1
38	5	XBOZZ		3051778-3	92392	BRACKET: INDICATOR MTG	EA	1
38	6	PAOZZ	5305-00-068-0502	MS90726-6	96906	SCREW, CAP, HEXAGON HEAD: FLANGE MTG, 1/4-28 THD SIZE, 3/4 IN. LG	EA	2
38	7	XBOZZ		4DTXS	45681	ELBOW, PIPE TO TUBE: TUBE TO INDICATOR	EA	1
38	8	PAOZZ	4720-00-110-3662	3050352-8	92392	HOSE ASSEMBLY: CLEANER TO INDICATOR	EA	1
38	9	PAOZZ	2910-00-133-9878	621979-4	92392	CAP, AIR CLEANER	EA	1
38	10	PAOZZ	2940-00-115-0488	3045843-4	92392	TUBE, AIR INLET TO CLEANER	EA	1
38	11	PAOZZ	4730-00-115-0227	1822	17884	CLAMP	EA	1
38	12	PAOZZ	5310-00-543-5973	MS35691-625	96906	NUT, PLAIN, HEXAGON: LOOP CLAMP, 3/8-16 THD SIZE	EA	1

(1) ILLUSTRATION (a) FIG NO.	(b) ITEM NO.	(2) SMR CODE	(3) FEDERAL STOCK NUMBER	(4) PART NUMBER	(5) FSCM	(6) DESCRIPTION USABLE ON CODE	(7) U/M	(8) QTY INC IN UNIT
38	13	XBOZZ		3036228-9	92392	CLAMP, LOOP: AIR CLEANER TO INDICATOR	EA	1
38	14	PAOZZ	5305-576-6987	MS35298-64	96906	SCREW, CAP, HEXAGON HEAD: LOOP CLAMP	EA	1
38	15	PAOZZ	4730-287-1649	MS39230-1	96906	ELBOW, PIPE: HOSE TO CLEANER STREET, 90 DEG, 1/8 IN. NPT	EA	1
38	16	PAOZZ	4720-489-5871	3038683-3	92392	ELBOW, RUBBER	EA	1
38	17	PAOZZ	4730-838-2378	MS21920-28R	96906	CLAMP, ADJUSTING	EA	2
38	18	XBOZZ		3050333-8	92392	TUBE, AIR OUTLET TO TURBOCHARGER	EA	1
38	19	PAOZZ	4730-985-0758	MS21920-39	96906	CLAMP, HOSE: AIR CLEANER HOSE	EA	2
38	20	PAOZZ	4820-115-0228	3040648-2	92392	ELBOW, RUBBER	EA	1
38	21	PAOZZ	5305-269-2803	MS90726-60	96906	SCREW, CAP, HEXAGON HEAD: BRACKET MTG	EA	4
38	22	PAOZZ	5310-080-6004	MS15795-14	96906	WASHER, FLAT: BRACKET MTG, 3/8 IN. ID	EA	4
38	23	PAOZZ	5310-637-9541	904206-0	89926	WASHER, LOCK: BRACKET MTG, 3/8 IN. ID	EA	5
38	24	PAOZZ	5310-543-5973	MS35691-625	96906	NUT, PLAIN, HEXAGON: BRACKET MTG, 3/8 IN. ID, 24 THD SIZE	EA	4
38	25	XBOZZ		P3231	17864	BRACKET ASSEMBLY, AIR CLEANER	EA	2
38	26	PAOZZ	5310-010-5616	105616	00000	NUT, PLAIN, SQUARE: BRACKET	EA	2
38	27	PAOZZ		13311	00000	SCREW, MACHINE: BRACKET	EA	2
38	28	PAOZZ	2940-133-9876	FWG12-0061	18265	AIR CLEANER ASSEMBLY	EA	1
39	1	XBOZZ		P103671	18265	CUP, OIL	EA	1
39	2	PAOZZ	5340-933-0698	P10-0808	18265	CLAMP ASSEMBLY, AIR CLEANER	EA	1
39	3	XBOZZ	2940-901-1286	P10-1238	18265	BAFFLE ASSEMBLY	EA	1
39	4	PAOZZ	5305-961-6507	P18464	18265	SCREW, ASSEMBLED WASHER: ELEMENT	EA	1
39	5	PAOZZ	2940-857-1982	P11-2031	18265	ELEMENT	EA	1
39	6	PAOZZ	5330-964-6318	P17804	18265	PACKING, PREFORMED: ELEMENT	EA	1
39	7	XAOZZ		P11-2077	18265	BODY, AIR CLEANER	EA	1
39	8	PAOZZ	2940-832-8729	P10-3198	18265	VALVE	EA	1
40	1	PAOZZ	2815-133-9988	4025927-7	92392	TUBE, TURBO TO MANIFOLD	EA	1
40	2	PAOZZ	4730-909-8627	MS35842-13	96906	CLAMP, HOSE: TUBE TO TURBOCHARGER	EA	2
40	3	PCOZZ	4720-110-3663	4026224-8	92392	HOSE, CONNECTING OUTLET TUBE	EA	1
40	4	PAOZZ	2990-115-0492	236705-0	92392	ELBOW: TURBOCHARGER EXHAUST	EA	1
40	5	PAOZZ	4730-168-1840	3000	27964	CLAMP ASSEMBLY, EXHAUST TUBE	EA	1
40	6	PAOZZ	4710-401-9416	3052867-3	92392	TUBE, EXHAUST	EA	1
40	7	PAOZZ	5310-637-9541	904206-0	92392	WASHER, LOCK: ELBOW MTG, 3/8 IN. ID	EA	4
40	8	PAOZZ	5305-269-3211	MS90725-60	96906	SCREW, CAP, HEXAGON HEAD: ELBOW MTG	EA	4
40	9	PAOZZ		921372-9	92392	ADAPTER, PIPE TO TUBE: OIL INLET TUBE, MALE, FLARED, 3/8 IN. TUBE, 1/8 IN. NPT	EA	1
40	10	PAOZZ	4730-568-4131	69FL3-8X1-8	30327	ELBOW, PIPE TO TUBE: OIL INLET TUBE, 90 DEG, 3/8 IN. TUBE, 1/8 IN. NPT	EA	1
40	11	PAOZZ	4710-930-9371	4026566-2	92392	TUBE ASSEMBLY, OIL INLET	EA	1
40	12	XAOZZ		4338301-7	92392	SLEEVE	EA	2
40	13	XAOZZ	4730-848-7131	917810-4	92392	NUT, TUBE COUPLING	EA	2
40	14	PAOZZ	4730-415-3172	443998	00000	ADAPTER, PIPE: OIL INLET TUBE	EA	2
40	15	PAOZZ	5310-115-6233	4000535	76667	NUT, SELF-LOCKING, HEXAGON: TURBOCHARGER MTG	EA	4
40	16	PAOZZ		MS27183-14	96906	WASHER, FLAT: TURBOCHARGER MTG, 13/32 IN. ID	EA	4

(1) ILLUSTRATION (a) FIG NO.	(b) ITEM NO.	(2) SMR CODE	(3) NATIONAL STOCK NUMBER	PART NUMBER	FSCM	DESCRIPTION USABLE ON CODE	U/M	QTY INC IN UNIT
40	17	PAOZZ	5307-00-115-1552	74513701	92392	STUD, PLAIN: TURBOCHARGER MTG	EA	4
40	18	PAOZZ	2815-00-920-6840	4025781-8	92392	GASKET: TURBOCHARGER TO EXHAUST MANIFOLD	EA	1
40	19	PAOZZ	4730-00-063-7920	A14	05657	CLAMP, HOSE	EA	2
40	20	PAOZZ	4720-00-110-3664	71703	80254	HOSE, CONNECTING OIL DRAIN	EA	1
40	21	PAOZZ	4730-00-172-8764	4255612-6	92392	ADAPTER, PIPE TO HOSE: DRAIN TUBE	EA	1
40	22	PAOZZ	2815-00-930-9320	4026191-9	92392	TUBE ASSEMBLY, OIL DRAIN	EA	1
40	23	XAOZZ		1290-105	01276	NUT, TUBE COUPLING	EA	1
40	24	XAOZZ		919612-2	92392	SLEEVE, COMPRESSION	EA	1
40	25	PAOZZ		2023-8-105	01276	ADAPTER, PIPE TO TUBE	EA	1
40	26	PAOZZ	5330-00-110-5692	40235376-7	92392	GASKET: TUBE TO MANIFOLD	EA	1
40	27	PAOZZ	4730-00-042-8988	444619	24617	PLUG, PIPE: TUBE	EA	1
40	28	PAOZZ	5305-00-558-4901	MS35301-62	96906	SCREW, CAP, HEXAGON HEAD: INLET TUBE MTG	EA	4
40	29	PAOZZ	5310-00-261-7340	904206-0	92392	WASHER, LOCK: INLET TUBE MTG	EA	4
40	30	PAOZZ	5310-00-080-6004	MS27183-14	96906	WASHER, FLAT: INLET TUBE MTG, 13/32 IN. ID	EA	4
40	31	PAOZZ	5340-00-276-5853	103896	09367	PLUG, EXPANSION: INLET TUBE	EA	1
40	32	PAOHH	2950-00-018-2191	4026911-0	92392	TURBOCHARGER ASSEMBLY	EA	1
41	1	PAHZZ	2910-00-133-9882	4056677-0	92392	HOUSING ASSEMBLY	EA	1
41	2	PCHZZ	5330-00-110-5691	4054321-7	92392	GASKET: HOUSING	EA	1
41	3	PAHZZ	5310-00-115-6229	4054318-3	92392	NUT: IMPELLER RETAINING	EA	1
41	4	PAHZZ		4054317-5	92392	WASHER: IMPELLER RETAINING NUT	EA	1
41	5	PAHZZ	2950-00-689-3106	4059281-8	92392	IMPELLER	EA	1
41	6	PAHZZ	5340-00-115-1474	4056671-3	92392	RING, RETAINING: BEARING	EA	1
41	7	PAHZZ	5330-00-484-1702	4059279-2	92392	PLATE: OIL RETAINING	EA	1
41	8	PAHZZ	5365-00-115-1528	4054312-6	92392	SHIM: .010 IN. THK	EA	4
41	8	PAHZZ	5365-00-115-1539	4054313-4	92392	SHIM: .015 IN. THK	EA	V
41	9	PCHZZ	5330-00-487-1704	4056670-5	92392	PACKING, PREFORMED: HOUSING	EA	1
41	10	PCHZZ	2950-00-912-3346	4059418-6	92392	SEAL ASSEMBLY	EA	2
41	11	PAHZZ	5340-00-114-2118	4059278-4	92392	SPACER: TURBINE SHAFT	EA	1
41	12	PAHZZ	2950-00-912-3378	4058884-0	92392	BEARING ASSEMBLY, SHAFT	EA	1
41	13	PAHZZ	2910-00-133-9875	4056674-7	92392	HOUSING, TURBINE	EA	1
41	14	PCHZZ	5330-00-110-5674	4054300-1	92392	GASKET: HOUSING	EA	1
41	15	PAHZZ	2950-00-912-3364	4054297-9	92392	CLAMP: HOUSING	EA	1
41	16	PAHZZ	5310-00-934-9751	MS35650-302	96906	NUT, PLAIN, HEXAGON: CLAMP	EA	1
41	17	PAHZZ	2910-00-110-9694	4056668-9	92392	WHEEL ASSEMBLY, TURBINE	EA	1
41	18	PAHZZ	2950-00-912-3371	4056673-9	92392	SHIELD, TURBINE	EA	1
41	19	PAHZZ	5340-00-110-5678	4054302-7	92392	SPRING, SHIELD	EA	1
41	20	PAHZZ		4055640-9	92392	SCREW, CAP, HEXAGON HEAD: HOUSING	EA	6
41	21	PAHZZ	2910-00-133-9881	4059045-7	92392	HOUSING, BEARING	EA	1
41	22	PAHZZ	4730-00-289-5176	444703	00000	PLUG, PIPE: HOUSING	EA	2
41	23	PAHZZ	5315-00-115-6270	922846-1	92392	PIN, GROOVED: HOUSING	EA	1
						GROUP 10 - OIL FILTER AND OIL COOLER		
42	1	PAOZZ	2940-00-580-6513	144513	88142	FILTER ASSEMBLY, LUBE OIL	EA	2

(1) ILLUSTRATION (a) FIG NO.	(b) ITEM NO.	(2) SMR CODE	(3) FEDERAL STOCK NUMBER	(4) PART NUMBER	(5) FSCM	(6) DESCRIPTION USABLE ON CODE	(7) U/M	(8) QTY INC IN UNIT
42	2	XBOZZ		150035	88142	COVER ASSEMBLY	EA	2
42	3	PCOZZ	5330-716-7385	104503	88142	GASKET: COVER	EA	2
42	4	PAOZZ	2940-580-6283	143407	87405	ELEMENT	EA	2
42	5	PAOZZ	2940-401-9429	234024	87405	BODY ASSEMBLY	EA	2
42	6	PAOZZ	2940-391-3330	109024	88142	SCREW: BRACKET MTG	EA	4
42	7	PAOZZ	2940-391-3330	102153	87405	BRACKET	EA	4
42	8	PAOZZ		151413	88142	WASHER, LOCK: BRACKET MTG	EA	4
42	9	PAOZZ		153684	88142	NUT, PLAIN, HEXAGON	EA	4
42		XBOZZ		154100	88142	PLATE, IDENTIFICATION	EA	2
42	10	PAOZZ	4730-231-3014	MS20822-10	96906	ELBOW, PIPE TO TUBE: HOSE TO FILTER	EA	4
42	11	PAOZZ		MS35690-502	96906	NUT, PLAIN, HEXAGON: FILTER MTG	EA	8
42	12	PAOZZ	5310-010-3320	MS35338-7	96906	WASHER, LOCK: FILTER MTG	EA	8
42	13	PAOZZ	5310-081-4219	MS27183-12	96906	WASHER, FLAT: FILTER MTG	EA	8
42	14	PAOZZ	5305-225-9081	MS90725-36	96906	SCREW, CAP, HEXAGON HEAD: FILTER MTG	EA	8
42	15	MOOZZ		3052037-3	92392	HOSE ASSEMBLY: FILTER TO BLOCK MANUFACTURE FROM:	EA	2
42		PAOZZ	4730-433-9087			FITTING, 2 EA REQUIRED	EA	
42		PCOZZ	4720-113-5484			HOSE, 33 1/2 IN. REQUIRED EA HOSE	EA	
42	16	PAOZZ	5310-261-7340	904206-0	92392	WASHER, LOCK: PLATE MTG	EA	2
42	17	PAOZZ	5305-269-3210	MS90725-59	96906	SCREW, CAP, HEXAGON HEAD: PLATE MTG	EA	2
42	18	XBOZZ		4026382-4	92392	PLATE, COVER: OIL FILTER	EA	2
42	19	KBFZZ		4025120-9	92392	GASKET: PLATE (PART OF KIT, FSN 2815-135-8922)	EA	2
42	20	XBOZZ		3052027-4	92392	BRACKET: CLAMP	EA	1
42	21	PAOZZ		3052035-7	92392	CLAMP, HOSE	EA	1
42	22	PAOZZ	4730-231-3015	MS20822-10-12	96906	ELBOW, PIPE: HOSE TO FILTER	EA	4
42	23	MOOZZ		3052036-5	92392	HOSE ASSEMBLY: FILTER TO BLOCK MANUFACTURE FROM:	EA	2
42		PAOZZ	4730-433-9087			FITTING, 2 EA REQUIRED	EA	
42		PCOZZ	4720-113-5484			HOSE, 31 1/2 IN. REQUIRED EA HOSE	EA	
42	24	PAOZZ		923683-7	92392	SCREW, SELF-TAPPING, HEXAGON WASHER HEAD: BRACKET MTG	EA	1
43	1	PAFZZ	2930-115-0485	4025368-4	92392	TUBE, WATER	EA	1
43	2	KBFZZ	5330-111-0733	923664-7	92392	PACKING, PREFORMED: WATER TUBE (PART OF KIT, FSN 2815-135-8922)	EA	4
43	3	PAFZZ		MS35297-112	96906	SCREW, CAP, HEXAGON HEAD: OIL COOLER MTG	EA	3
43	4	PAFZZ	5310-010-3323	904208-6	92392	WASHER, LOCK: OIL COOLER MTG	EA	3
43	5	PAFZZ		MS35297-95	96906	SCREW, CAP, HEXAGON HEAD: OIL COOLER MTG	EA	2
43	6	PAFZZ	5310-010-3322	904207-8	92392	WASHER, LOCK: OIL COOLER MTG	EA	3
43	7	PAFZZ	5305-069-5574	MS90725-86	96906	SCREW, CAP, HEXAGON HEAD: OIL COOLER MTG	EA	1
43	8	KBFZZ	5330-111-0736	923649-6	92392	PACKING, PREFORMED: COOLER (PART OF KIT, FSN 2815-135-8922)	EA	2
43	9	XBFFF	2930-409-3879	4026361-8	92392	OIL COOLER	EA	1
43	10	XBFZZ	4820-477-9779	145	79470	COCK, DRAIN: OIL COOLER	EA	2
43	11	PAFZZ	5310-012-0377	MS35690-605	96906	NUT, PLAIN, HEXAGON: OIL COOLER	EA	8
43	12	PAFZZ	5310-261-7340	904206-0	92392	WASHER, LOCK: OIL COOLER	EA	8
43	13	PAFZZ	5305-846-5703	MS90728-70	96906	SCREW, CAP, HEXAGON HEAD: OIL COOLER	EA	8

	ILLUSTRATION (a) FIG NO.	(b) ITEM NO.	SMR CODE	NATIONAL STOCK NUMBER	PART NUMBER	FSCM	DESCRIPTION USABLE ON CODE	U/M	QTY INC IN UNIT
	43	14	PAFZZ		MS35297-118	96906	SCREW, CAP, HEXAGON HEAD: OIL COOLER	EA	7
	43	15	PAFZZ		180191	00000	SCREW, CAP, HEXAGON HEAD: OIL COOLER	EA	1
	43	16	PAFZZ	5310-00-899-9151	MS51967-13	96906	NUT, PLAIN, HEXAGON: OIL COOLER	EA	8
	43	17	PAFZZ	5310-00-010-3323	MS35338-10	96906	WASHER, LOCK: OIL COOLER	EA	8
	43	18	PAFZZ	2940-00-133-9895	4025433-6	92392	HEADER, INLET	EA	1
	43	19	KBFZZ	5330-00-401-5135	4025632-3	92392	GASKET: OIL COOLER (PART OF KIT, NSN 2815-00-135-8922)	EA	2
	43	20	PAFZZ	2930-00-812-1715	4026360-0	92392	COOLER ASSEMBLY, ENGINE OIL	EA	1
	43	21	PAFZZ	2520-00-133-9960	4354395-8	92392	COOLER ASSEMBLY, CONVERTOR OIL	EA	1
	43	22	PAFZZ	2940-00-133-9896	4026362-6	92392	HEADER, OUTLET: OIL COOLER	EA	1
	43	23	PCFZZ	5330-00-080-0213	923814-8	92392	PACKING, PREFORMED: OIL COOLER	EA	1
R	42		PCFZZ	5330-00-135-8822	4027283-3	92392	GASKET KIT, INTERMEDIATE (CONSISTS OF)	EA	1
	42	19					1-GASKET		
	43	2					4-PACKING, PREFORMED		
	43	8					1-PACKING, PREFORMED		
	43	19					2-GASKET		
	54	3					1-PACKING, PREFORMED		
	54	4					1-GASKET		
	55	6					1-PACKING, PREFORMED		
	68	1					1-PACKING		
	68	2					1-PACKING		
	73	2					1-GASKET		
	73	7					1-GASKET		
	73	12					1-GASKET		
	73	14					1-GASKET		
	73	22					2-GASKET		
	76	17					1-GASKET		
	76	27					2-GASKET		
	83	41					1-GASKET		
							1-PACKING, PREFORMED		
							1-PACKING, PREFORMED		
							GROUP 11 - FUEL SYSTEM		
	44	1	PAOZZ	4730-00-289-2368	925015-0	79470	ELBOW, STREET: PRIMER HOSE, 90 DEG, 1/4 IN. MALE, 1/8 IN. FEMALE	EA	1
	44	2	PCOZZ	4720-00-110-1942	3051032-5	92392	HOSE ASSEMBLY, TANK PRIMER	EA	1
	44	3	PAOZZ	4730-00-254-6226	49X5A5X4	79740	ELBOW, PIPE TO TUBE: PRIMER HOSE	EA	2
	44	4	PAOZZ	5305-00-912-4819	MS35276-276	96906	SCREW, MACHINE: PRIMER MTG, NO. 10-32 THD SIZE, 1 IN. LG	EA	2
	44	5	PAOZZ	4320-00-335-9260	12385	84760	PUMP ASSEMBLY, PRIMER	EA	1
	44	6	PAOZZ	5310-00-010-6497	MS35338-5	96906	WASHER, LOCK: PRIMER MTG, 3/16 IN. ID	EA	2
	44	7	PAOZZ		MS35650-102	96906	NUT, PLAIN, HEXAGON: PRIMER MTG, NO. 10-32 THD SIZE	EA	2
	44	8	XBOZZ		3048541-1	92392	BRACKET, PRIMER PUMP	EA	1
	44	9	PAOZZ	4730-00-640-6330	925010-1	92392	ADAPTER: PRIMER TO FILTER, 1/8 IN., 1/4 IN. MALE	EA	1
C	44	10	PAOOO	2910-00-492-7306	7767247	19207	FILTER ASSEMBLY	EA	1

(1) ILLUSTRATION (a) FIG. NO.	(b) ITEM NO.	(2) SMR CODE	(3) NATIONAL STOCK NUMBER	(4) PART NUMBER	(5) FSCM	(6) DESCRIPTION USABLE ON CODE	(7) U/M	(8) QTY INC IN UNIT
44	11	XA0ZZ		3042830-1	92392	HEAD, FILTER	EA	1
44	12	PA0ZZ	2910-00-492-7306	HY10921	21102	STRAINER, FUEL	EA	1
44	13	PC0ZZ	5330-00-550-7312	45012-3	30327	GASKET, HEAD	EA	1
44	14	PA0ZZ	2910-00-269-7126	32276	30327	BOWL, FUEL STRAINER	EA	1
44	15	XB0ZZ	2940-00-371-6579	32279	30327	BAIL ASSEMBLY, BOWL	EA	1
44	16	XA0ZZ		62560	30327	NUT, BAIL	EA	1
44	17	PA0ZZ	4730-00-937-0808	9025017-6	92392	ELBOW, PIPE TO TUBE: FILTER TO HOSE, 90 DEG, FLARE TYPE, 3/8 IN. TUBE, 1/4 IN. NPT, MALE	EA	2
44	18	PC0ZZ		3052028-2	92392	HOSE ASSEMBLY, FUEL	EA	1
44	19	PA0ZZ	4710-00-115-0489	3051039-0	92392	TUBE ASSEMBLY, FUEL FILTER	EA	1
44	20	PA0ZZ	5310-00-543-5973	MS35691-625	96906	NUT, PLAIN, HEXAGON: PRIMER BRACKET MTG, 3/8-24 THD SIZE	EA	2
44	21	PA0ZZ	5310-00-261-7340	904206-0	92392	WASHER, LOCK: PRIMER BRACKET MTG, 3/8 IN. ID	EA	2
44	22	PA0ZZ		MS35298-64	96906	SCREW, CAP, HEXAGON HEAD: PRIMER BRACKET MTG, 3/8-24 THD SIZE	EA	2
45	1	PA0ZZ	5310-00-809-4085	MS27183-16	96906	WASHER, FLAT: BRACKET MTG, 7/16 IN. ID	EA	2
45	2	PA0ZZ	5310-00-010-3322	904207-8	92392	WASHER, LOCK: BRACKET MTG, 7/16 IN. ID	EA	2
45	3	PA0ZZ	5305-00-069-5572	MS90725-84	96906	SCREW, CAP, HEXAGON HEAD: BRACKET MTG, 7/16-14 THD SIZE, 7/8 IN. LG	EA	2
45	4	PA0ZZ	4730-00-111-2506	919005-9	92392	ELBOW, PIPE TO TUBE: TUBE TO FILTER	EA	1
45	5	PA0ZZ	4710-00-115-0491	4027273-4	92392	TUBE ASSEMBLY, FUEL FILTER TO INJECTOR PUMP	EA	1
45	6	PA0ZZ	5305-00-269-3208	MS90725-57	96906	SCREW, CAP, HEXAGON HEAD: FILTER MTG, 3/8-16 THD SIZE, 5/8 IN. LG	EA	4
45	7	PA0ZZ	5310-00-261-7340	904206-0	92392	WASHER, LOCK; FILTER MTG, 3/8 IN. ID	EA	4
45	8	XB0ZZ		X230209	88142	BRACKET, ANGLE FUEL FILTER MOUNTING	EA	1
45	9	PA0ZZ	4730-00-111-2507	920280-5	92392	ELBOW, PIPE TO TUBE: TUBE TO PUMP	EA	1
45	10	PA000	2910-00-133-9884	X230208	88142	FILTER ASSEMBLY, FUEL	EA	1
45	11	PA0ZZ	4730-00-044-4614	444614	00000	PLUG, DRAIN	EA	1
45	12	PA0ZZ	2910-00-820-2279	149060	92392	BODY, FILTER	EA	1
45	13	PA0ZZ	2910-00-287-1930	121709	88142	ELEMENT, FILTER	EA	1
45	14	XA0ZZ	5365-00-784-0042	103629	88142	RING, RETAINING: ELEMENT	EA	1
45	15	PC0ZZ	5330-00-663-4773	101489	73370	GASKET, HEAD	EA	1
45	16	XA0ZZ		101488	88142	HEAD, FILTER	EA	1
45	17	PC0ZZ		101487	88142	GASKET, SCREW	EA	1
45	18	PA0ZZ	2910-00-861-6890	104071	88142	SCREW, VENT	EA	1
45	19	PA0ZZ	4730-00-537-1192	104018	73340	PLUG, VENT	EA	1
46	1	XB0ZZ	2910-00-166-4303	LP3B64R72	61112	CONTROL CABLE ASSEMBLY	EA	1
46		XA0ZZ		LP2974R	61112	CABLE, CONTROL	EA	1
46		XA0ZZ		LP2814	61112	STOP ASSEMBLY	EA	1
46	2	XB0ZZ		3016496-6	92392	CLAMP, LOOP: CONTROL CABLE	EA	1
46	3	XB0ZZ	4730-00-814-4132	269P	30327	ELBOW, PIPE TO TUBE: PRIMER TO LINE	EA	1
46	4	XB0ZZ		3052091-0	92392	TUBE ASSEMBLY, VALVE TO AIR INTAKE	EA	1
46	5	PA0ZZ	2910-00-133-9883	LP2773-15	61112	FLUID INJECTOR ASSEMBLY, COLD WEATHER START	EA	1
46	6	PA0ZZ	4820-00-115-0230	LP3235-9	61112	VALVE, W/BRACKET ASSEMBLY	EA	1
46	7	PA0ZZ	5305-00-225-3839	MS9-90725-8	96906	SCREW, CAP, HEXAGON HEAD: VALVE AND CLAMP MTG	EA	4
46	8	PA0ZZ	5310-00-809-3078	MS27183-11	96906	WASHER, FLAT: VALVE AND CLAMP MTG	EA	4
46	9	PA0ZZ	5310-00-010-3319	904204-5	92392	WASHER, LOCK: VALVE AND BRACKET MTG	EA	4

(1) ILLUSTRATION (a) FIG NO	(b) ITEM NO	(2) SMR CODE	(3) NATIONAL STOCK NUMBER	PART NUMBER	(5) FSCM	(6) DESCRIPTION USABLE ON CODE	(7) U/M	(8) QTY INC IN UNIT
46	10	PAOZZ		109084	00000	NUT, PLAIN, HEXAGON: VALVE AND CLAMP MTG	EA	4
46	11	PAOZZ		LP1058	61112	CLAMP, TANK, COLD WEATHER START	EA	1
46	12	PAOZZ	2910-00-646-9727	LP535-1	61112	CONTAINER, FLUID, COLD WEATHER START	EA	1
47	1	PAOZZ	2815-00-133-9986	4025219-9	92392	TUBE ASSEMBLY, DRIP	EA	1
47	2	PAOZZ	5340-00-110-5680	917806-2	92392	SLEEVE	EA	7
47	3	PAOZZ	4730-00-985-0642	917809-6	92392	NUT, TUBE COUPLING	EA	7
47	4	PAOZZ	2910-00-352-3024	4501149-1	92392	SLEEVE: INJECTION TUBE, 1/4 IN. TUBE	EA	6
47	5	PAOZZ	4730-00-595-4924	4504409-6	92392	NUT, TUBE COUPLING; INJECTION TUBES	EA	6
47	6	PAOZZ	4710-00-168-1854	4026538-1	92392	TUBE ASSEMBLY, CYLINDER: NO. 6	EA	1
47	7	PAOZZ	4710-00-168-1814	4026537-3	92392	TUBE ASSEMBLY, CYLINDER: NO. 5	EA	1
47	8	PAOZZ	4710-00-168-1815	4026536-5	92392	TUBE ASSEMBLY, CYLINDER: NO. 4	EA	1
47	9	PAOZZ	4710-00-168-1852	4026535-7	92392	TUBE ASSEMBLY, CYLINDER: NO. 3	EA	1
47	10	PAOZZ	4710-00-168-1825	4026534-0	92392	TUBE ASSEMLBY, CYLINDER: NO. 2	EA	1
47	11	PAOZZ	4730-00-111-2505	921534-4	92392	CONNECTOR: DRIP TUBE TO DRAIN TUBE	EA	1
47	12	PAOZZ	4710-00-143-8989	4026116-6	92392	TUBE ASSEMBLY, FUEL RETURN	EA	1
47	13	PAOZZ	4710-00-168-1823	4026533-2	92392	TUBE ASSEMBLY, CYLINDER: NO. 1	EA	1
47	14	XBOZZ		4026479-8	92392	CLAMP: INJECTION TUBE	EA	12
47	15	PAOZZ	5340-00-115-6126	4025218-1	92392	SPACER: INJECTION TUBE	EA	2
47	16	XBOZZ	2910-00-408-9391	4025217-3	92392	CLAMP: INJECTION TUBE	EA	1
47	17	PAOZZ	5310-00-010-3319	904204-5	92392	WASHER, LOCK: TUBE CLAMP, 1/4 IN. SCREW SIZE	EA	2
47	18	PAOZZ	5310-00-723-4458	MS35690-404	96906	NUT, PLAIN, HEXAGON: TUBE CLAMP, 1/4-20 THD SIZE	EA	2
47	19	PAOZZ	5305-00-071-2242	MS90725-9	96906	SCREW, CAP, HEXAGON HEAD: TUBE CLAMP, 1/4-20 THD SIZE, 1 1/4 IN. LG	EA	2
47	20	XBOZZ		4507415-0	92392	CLAMP: INJECTION TUBE	EA	2
47	21	PAOZZ	5340-00-891-6136	4507359-0	92392	SPACER: INJECTION TUBE	EA	2
47	22	PAOZZ	5310-00-010-3320	MS35338-7	96906	WASHER, LOCK CLAMP, 5/16 IN. SCREW SIZE	EA	2
47	23	PAOZZ	5310-00-543-2629	MS35690-502	96906	NUT, PLAIN, HEXAGON: TUBE CLAMP, 5/16-18 THD SIZE	EA	2
47	24	PAOZZ	5306-00-225-9081	MS90725-36	96906	SCREW, CAP, HEXAGON HEAD: TUBE CLAMP, 5/16-18 THD SIZE, 1 1/4 IN. LG	EA	2
48	1	PAOOO	2910-00-152-9874	4027883-0	92392	NOZZLE, FUEL INJECTOR	EA	6
48	2	XADZZ		4021227-6	92392	NUT	EA	6
48	3	PCOZZ	5330-00-789-6645	4511243-0	92392	GASKET	EA	12
48	4	PADZZ	5305-00-240-6816	4378033-7	92392	SCREW	EA	6
48		PAOZZ	4710-00-577-7591			TUBE, COPPER, 1/8" COIL 25 FT, AS REQUIRED		
48	5	PADZZ	5310-00-400-8503	4511213-3	92392	NUT	EA	6
48	6	PADZZ	5360-00-052-1531	4380652-0	92392	SPRING	EA	6
48	7	PADZZ		4025148-0	92392	ROD	EA	6
48	8	XADZZ		4025147-2	92392	BODY, NOZZLE	EA	6
48	9	PAFZZ	5315-00-111-0809	4025149-8	92392	PIN, STRAIGHT	EA	12
48	10	PAFZZ	2910-00-110-9692	4026654-6	92392	NOZZLE ASSEMBLY	EA	6
48	11	PADZZ	5310-00-400-8505	4025146-4	92392	NUT	EA	6
48	12	PADZZ		74025150	92392	GASKET	EA	6
48	13	PAOZZ	2910-00-930-5797	4025385-8	92392	CAP, PROTECTIVE	EA	12
48	14	PAOZZ	5310-00-010-3320	MS35338-7	96906	WASHER, LOCK: INJECTOR MTG, 5/16 IN. ID	EA	12
48	15	PAOZZ	5306-00-018-0084	180084	00000	BOLT, MACHINE, INJECTOR MTG, 5/16-18 THD SIZE, 1 5/8 IN. LG	EA	12

(1) ILLUSTRATION (a) FIG NO.	(b) ITEM NO.	(2) SMR CODE	(3) FEDERAL STOCK NUMBER	(4) PART NUMBER	(5) FSCM	(6) DESCRIPTION USABLE ON CODE	(7) U/M	(8) QTY INC IN UNIT
49	1	PAOZZ	4730-430-4390	69FL1-4X1-8	30327	ELBOW, PIPE TO TUBE: LINE TO TEE	EA	1
49	2	PAOZZ	4730-274-9258	922804-0	92392	TEE, PIPE: LINE TO PUMP, 5/16 X 1/8 NPT, BRASS	EA	1
49	3	PAFZZ	5310-012-0377	MS35690-605	96906	NUT, PLAIN, HEXAGON: PUMP MTG, 3/8 IN. ID, 16 THD SIZE	EA	2
49	4	PAFZZ	5310-261-7340	904206-0	92392	WASHER, LOCK: PUMP MTG, 3/8 IN. ID	EA	2
49	5	PCFZZ	2910-919-9739	4048596-3	92392	PACKING, PREFORMED: PUMP MTG	EA	1
49	6	XBFZZ		4026004-4	92392	ADAPTER ASSEMBLY: PUMP MTG	EA	1
49	7	PAFZZ	2910-930-9358	4025249-6	92392	BEARING, SLEEVE	EA	1
49	8	PAFZZ		10505	84760	STUD, PLAIN: PUMP MTG	EA	2
49	9	PCFZZ	5330-110-5690	4255661-3	92392	PACKING, PREFORMED	EA	1
49	10	PAFZZ	2815-110-9616	4025303-1	92392	GEAR, SPUR	EA	1
49	11	PAFZZ	5310-080-6004	MS27183-14	96906	WASHER, FLAT: ADAPTER MTG, 13/32 IN. ID	EA	3
49	12	PAFZZ	5310-261-7340	904206-0	92392	WASHER, LOCK: ADAPTER MTG, 3/8 IN. ID	EA	3
49	13	PAFZZ	5310-012-0377	MS25690-605	96906	NUT, PLAIN, HEXAGON: ADAPTER, 3/8 IN. ID, 16 THD SIZE	EA	3
49	14	PAFDD	2910-111-2626	DCGFC631-3FW	84760	PUMP ASSEMBLY, INJECTOR	EA	1
50	1	XADZZ		14760	84760	NUT, SELF-LOCKING, HEXAGON: COIL	EA	2
50	2	XADZZ		12529	84760	EYELET	EA	1
50	3	XADZZ		12519	84760	NUT, PLAIN, HEXAGON: COVER MTG	EA	2
50	4	XADZZ	5310-830-7825	12500	84760	WASHER, INSULATING	EA	2
50	5	PADZZ	2910-887-1572	15830	84760	CONNECTOR ASSEMBLY: FUEL LINE	EA	1
50	6	PADZZ		12202	84760	SCREW: COVER MTG	EA	3
50	7	PADZZ	5310-796-8638	11582	84760	WASHER, LOCK: COVER MTG	EA	3
50	8	PADZZ		13521	84760	WASHER, FLAT: COVER MTG	EA	3
50	9	PADZZ	2910-335-9329	12106	84760	COVER, PUMP	EA	1
50	10	XDOZZ	5330-640-9399	12054	84760	GASKET: COVER (PART OF KIT, P/N 4059211-5 (92392))	EA	1
50	11	XADZZ	5330-786-4025	12513	84760	TUBE: COIL	EA	2
50	12	XADZZ	5360-691-7207	12480	84760	SPRING: ARM	EA	1
50	13	XADZZ	2910-562-9623	12479	84760	ARM	EA	1
50	14	PADZZ	2920-894-9391	4059656-1	92392	COIL ASSEMBLY	EA	1
50	15	PADZZ	2910-972-7959	12253	84760	CAM, SHUTOFF	EA	1
50	16	PADZZ	2910-788-0989	12221	84760	LEVER: SHUTOFF	EA	1
50	17	PADZZ	2990-786-3968	11901	84760	HOOK ASSEMBLY	EA	1
50	18	PADZZ	5360-335-9327	11919	84760	SPRING: HOOK	EA	1
50	19	PADZZ	2990-786-6341	11969	84760	GUIDE, GOVERNOR	EA	1
50	20	PADZZ		14680	84760	ARM ASSEMBLY	EA	1
50	21	PADZZ	5310-877-4952	16610	84760	WASHER, SHIM	EA	1
50	22	PADZZ	2910-980-2306	11560	09367	VALVE, METERING	EA	1
50	23	PADZZ	5360-784-0346	11604	84760	SPRING: METERING VALVE	EA	1
50	24	PADZZ	3120-194-2515	4055442-0	92392	BUSHING: PUMP SHAFT	EA	2
50	25	KDDZZ	5330-641-8282	12040	84760	SEAL: SHAFT (PART OF KIT, P/N 4059211-5 (92392))	EA	2
50	26	PADZZ	5310-877-4956	14408	84760	WASHER, SHAFT	EA	2
50	27	PADZZ	5305-891-8979	12972	84760	SCREW: ARM ADJUSTING	EA	2
50	28	PADZZ		12173	84760	NUT, PLAIN, HEXAGON: ARM ADJUSTING SCREW	EA	2

	ILLUSTRATION (a) FIG NO.	(b) ITEM NO.	SMR CODE	FEDERAL STOCK NUMBER	PART NUMBER	FSCM	DESCRIPTION USABLE ON CODE	U/M	QTY INC IN UNIT
C	50	29	PADZZ		15024	84760	SHAFT ASSEMBLY, GOVERNOR	EA	1
C	50	30	PADZZ		15026	84760	LEVER ASSEMBLY, CONTROL	EA	1
C	50	31	PADZZ	2910-751-8916	13003	84760	SPRING: CONTROL SHAFT	EA	1
C	50	32	PADZZ	2910-786-1550	13010	84760	RETAINER, PACKING	EA	1
C	50	33	PADZZ	5305-826-6018	12999	84760	SCREW: ARM MTG	EA	1
C	50	34	PADZZ	2910-128-1185	11611	84760	CAP: ADJUSTING SCREW	EA	1
C	50	35	PADZZ	5310-891-5703	13807	84760	NUT, PLAIN, HEXAGON: ADJUSTING	EA	1
C	50	36	KDDZZ	5330-641-8282	12040	84760	SEAL: ADJUSTING SCREW (PART OF KIT, P/N 4059211-5 (92392))	EA	1
C	50	37	PADZZ	5305-993-8688	14675	84760	SCREW: ADJUSTING	EA	1
C	50	38	KDDZZ		13556	84760	WASHER, GUIDE (PART OF KIT, P/N 4059211-5 (92392))	EA	1
C	50	39	PADZZ	2910-788-0988	12208	84760	STUD	EA	1
C	50	40	PADZZ		12235	84760	SHAFT: GOVERNOR CONTROL	EA	1
C	50	41	PADZZ	2910-791-9437	12288	84760	NUT, PLAIN, HEXAGON: SHAFT	EA	2
C	50	42	KDDZZ	5330-641-8286	11588	84760	SEAL, SHAFT (PART OF KIT, P/N 4059211-5 (92392))	EA	2
C	50	43	PADZZ	2910-335-9331	12214	84760	SHAFT	EA	1
C	50	44	PADZZ	5360-816-8227	11966	84760	SPRING, HELICAL, COMPRESSION: ARM	EA	1
C	50	45	PADZZ	2990-787-6424	12210	84760	RETAINER, GOVERNOR	EA	1
C	50	46	PADZZ	2910-994-5504	11994	84760	SPRING, GOVERNOR	EA	1
C	50	47	PADZZ	2990-897-2539	14482	84760	ARM	EA	1
C	51	1	PADZZ	5305-137-3186	17633	84760	SCREW: ADVANCE, ADJUSTING	EA	1
C	51	2	PADZZ	5360-137-3202	12695	84760	SPRING: ADVANCE	EA	1
C	51	3	PADZZ	5360-138-9815	12008	84760	SPRING: ADVANCE SCREW	EA	1
C	51	4	XADZZ		17634	84760	WASHER: PISTON	EA	1
C	51	5	XADZZ		17635	84760	RING, RETAINING	EA	1
C	51	6	PADZZ	2910-932-4787	18967	84760	RING, RETAINING: ADVANCE SCREW	EA	2
C	51	7	KDDZZ	5330-974-6643	12764	84760	SEAL: HOUSING PLUG (PART OF KIT, P/N 4059211-5 (92392))	EA	4
C	51	8	XADZZ		17632	84760	PLUG: PISTON HOLE	EA	1
C	51	9	KDDZZ	5330-641-8282	12040	84760	SEAL (PART OF KIT, P/N 4059211-5 (92392))	EA	1
C	51	10	PADZZ	5310-891-5703	13807	84760	NUT, PLAIN, HEXAGON: ADVANCE SCREW	EA	1
C	51	11	PADZZ	2910-128-1185	11611	84760	CAP: ADVANCE SCREW	EA	1
C	51	12	KDDZZ	5330-641-8283	11507	84760	SEAL: BOLT (PART OF KIT, P/N 4059211-5 (92392))	EA	2
C	51	13	PADZZ	5305-240-6754	15479	84760	SCREW	EA	1
C	51	14	PADZZ	5340-335-9299	10408	84760	SEAL: HOUSING SCREWS	EA	4
C	51	15	PADZZ		15740	84760	PIN, ADVANCE	EA	2
C	51	16	KDDZZ	5330-936-4587	12766	84760	SEAL: HOUSING PLUG (PART OF KIT, P/N 4059211-5 (92392))	EA	2
C	51	17	PADZZ		15739	84760	PLUG: HOUSING	EA	2
C	51	18	KDDZZ	5330-061-8538	15750	84760	SEAL: HOUSING PLUG (PART OF KIT, P/N 4059211-5 (92392))	EA	1
C	51	19	PADZZ		17794	84760	PISTON, ADVANCE	EA	1
C	51	20	PADZZ		15752	84760	PLUG: ADVANCE SCREW	EA	1
C	52	1	PAFZZ	2910-133-9877	16144	84760	BUTTON, THRUST	EA	1
C	52	2	PAFZZ	2910-887-1536	10541	84760	SPRING: THRUST BUTTON	EA	1
C	52	3	PAFZZ		10529	84760	NUT, PLAIN, HEXAGON: GEAR MTG, 9/16-18 THD SIZE	EA	1
C	52	4	PAFZZ		15034	84760	WASHER, LOCK; GEAR MTG	EA	1

	(1) ILLUSTRATION (a) FIG NO.	(b) ITEM NO.	(2) SMR CODE	(3) FEDERAL STOCK NUMBER	(4) PART NUMBER	(5) FSCM	(6) DESCRIPTION USABLE ON CODE	(7) U/M
C	52	5	PAFZZ	5315-616-5525	910224-5	92392	KEY, WOODRUFF: GEAR MTG	EA
C	52	6	PADZZ		16064	84760	SHAFT, PUMP	EA
C	52	7	KDDZZ	5330-877-4972	10519	84760	SEAL: SHAFT (PART OF KIT, P/N 4059211-5 (92392))	EA
C	52	8	KDDZZ	5330-757-1680	10453	84760	SEAL: SHAFT (PART OF KIT, P/N 4059211-5 (92392))	EA
C	52	9	XBDZZ		15749	84760	HOUSING ASSEMBLY, PUMP	EA
C	52	10	PADZZ	5305-240-6750	11332	84760	SCREW: HEAD HOLDING	EA
C	52	11	KDDZZ		10464	09367	WASHER (PART OF KIT, P/N 4059211-5 (92392))	EA
C	52	12	XBDZZ	5305-993-8748	12259	84760	PLUG	EA
C	52	13	KDDZZ	5330-506-3975	10574	84760	GASKET: PLATE (PART OF KIT, P/N 4059211-5 (92392))	EA
C	52	14	PADZZ	2910-787-6422	10567	84760	COVER, HOUSING	EA
C	52	15	PADZZ	5305-156-2937	10584	84760	SCREW, MACHINE: COVER	EA
C	52	16	PADZZ		17792	84760	HEAD ASSEMBLY, HYDRAULIC	EA
C	52	17	PADZZ		4051381-4	92392	SCREW: WIRE RETAINER	EA
C	52	18	PADZZ	2910-887-1548	11439	84760	RETAINER, WIRE	EA
C	52	19	PADZZ	2910-887-1546	11437	84760	WIRE, VENT	EA
C	52	20	PADZZ	2910-786-3964	11212	84760	RETAINER, HEAD	EA
C	52	21	PADZZ	5340-786-4027	11208	84760	RING, RETAINING: SLEEVE	EA
C	52	22	PADZZ	2910-335-9312	11315	84760	SLEEVE: HYDRAULIC HEAD	EA
C	52	23	PADZZ	2910-192-9405	18137	84760	BLADE	EA
C	52	24	PADZZ	5360-900-2564	15699	84760	SPRING: BLADE	EA
C	52	25	PADZZ	2910-992-7084	11525	84760	PIN, SPRING	EA
C	52	26	KDDZZ	5360-853-2376	11329	84760	SEAL: THRUST PLATE (PART OF KIT, P/N 4059211-5 (92392))	EA
C	52	27	PADZZ	2910-901-0753	15875	84760	PLATE, THRUST	EA
C	52	28	KDDZZ	2910-901-0749	17056	84760	SEAL: FILTER (PART OF KIT, P/N 4059211-5 (92392))	EA
C	52	29	KDDZZ	2910-898-4927	15627	84760	SEAL: FILTER (PART OF KIT, P/N 4059211-5 (92392))	EA
C	52	30	PADZZ	2910-898-4926	15225	84760	FILTER ELEMENT	EA
C	52	31	KDDZZ	5330-171-5941	12406	84760	SEAL: FILTER (PART OF KIT, P/N 4059211-5 (92392))	EA
C	52	32	PADZZ		17793	84760	SLEEVE	EA
C	52	33	PADZZ	2910-321-8737	11508	84760	PISTON	EA
C	52	34	PADZZ	5360-930-9363	15701	84760	SPRING, PISTON	EA
C	52	35	XBDZZ		15228	84760	PLUG: FILTER	EA
C	52	36	KDDZZ	5330-641-8283	11507	84760	SEAL: FILTER (PART OF KIT, P/N 4059211-5 (92392))	EA
C	52	37	XBDZZ		15877	84760	PLATE, END	EA
C	52	38	KDDZZ		15821	84760	PLUG, PIPE: END PLATE (PART OF KIT, P/N 4059211-5 (92392))	EA
C	52	39	PADZZ	5305-786-4028	11532	84760	SCREW: END PLATE	EA
C	52	40	PADZZ	5310-796-8638	11582	84760	WASHER, LOCK: END PLATE	EA
C	52	41	PADZZ	5310-994-1688	13521	84760	WASHER, FLAT: END PLATE	EA
C	52	42	PADZZ	5305-786-4032	13837	84760	SCREW: RETAINING	EA
C	52	43	PADZZ	2910-897-2461	16440	84760	STOP	EA
C	52	44	PADZZ	2910-764-0330	13839	84760	SPRING: STOP	EA
C	52	45	PADZZ		13829	84760	VALVE, DELIVERY	EA
C	52	46	KDDZZ		16225	84760	WASHER, FLAT: FUEL CONNECTOR (PART OF KIT, P/N 4059211-5 (92392))	EA

	ILLUSTRATION (a) FIG NO.	(b) ITEM NO.	SMR CODE	FEDERAL STOCK NUMBER	PART NUMBER	FSCM	DESCRIPTION USABLE ON CODE	U/M	QTY INC IN UNIT
C	52	47	PAFZZ	4730-335-9315	11346	84760	SCREW: FUEL CONNECTOR	EA	6
C	52	48	PADZZ	2910-887-1539	11141	84760	ROLLER, CAM	EA	4
C	52	49	PADZZ		15833	84760	SHOE, CAM	EA	4
C	52	50	PADZZ	5305-125-6193	15619	84760	SCREW: SPRING	EA	1
C	52	51	PADZZ		15724	84760	SPRING, LEAF	EA	1
C	52	52	PADZZ	2910-887-1547	11438	84760	SCREW: CAM	EA	2
C	52	53	XBDZZ	2910-887-1564	12216	84760	SCREW: HEAD	EA	1
	52	54	PADZZ		15724	84760	SPRING, LEAF	EA	1
C	52	55	PADZZ		15869	84760	SCREW: SPRING	EA	1
C	52	56	KDDZZ	5330-641-8291	11304	84760	SEAL (PART OF KIT, P/N 4059211-5 (92392))	EA	1
C	52	57	PADZZ		17086	84760	CAM, RING	EA	1
C	52	58	KDDZZ		16448	84760	RING, FLEXIBLE (PART OF KIT, P/N 4059211-5 (92392))	EA	1
C	52	59	PADZZ		16846	84760	RETAINER ASSEMBLY	EA	1
C	52	60	PADZZ		15835	84760	RING, RETAINING: WEIGHT	EA	1
C	52	61	PADZZ	2910-980-2290	11658	84760	WEIGHT	EA	6
C	52	62	PADZZ	3120-294-2219	11620	84760	WASHER, THRUST	EA	1
C	52	63	PADZZ	3120-886-6208	14483	84760	SLEEVE	EA	1
C	52		XBDZZ		10394	84760	PLATE, IDENTIFICATION	EA	1
C	52		PADZZ	5305-253-5606	MS21318-7	96906	SCREW, DRIVE: PLATE	EA	2
	50		PCDZZ	2910-128-1170	4059211-5	92392	GASKET KIT, FUEL INJECTION PUMP (CONSISTS OF)	EA	1
	50	10					1-GASKET		
	50	25					1-SEAL		
	50	26					2-WASHER		
	50	36					1-SEAL		
	50	38					1-WASHER		
	50	42					2-SEAL		
	51	7					4-SEAL		
	51	9					1-SEAL		
	51	12					2-SEAL		
	51	16					4-SEAL		
	51	18					1-SEAL		
	52	7					1-SEAL		
	52	8					2-SEAL		
	52	11					1-WASHER		
	52	13					2-GASKET		
	52	26					1-SEAL		
	52	28					1-SEAL		
	52	29					1-SEAL		
	52	31					2-SEAL		
	52	36					2-SEAL		
	52	38					1-PLUG		
	52	46					16-WASHER		
	52	56					2-SEAL		

ILLUSTRATION (a) FIG NO.	(b) ITEM NO.	SMR CODE	NATIONAL STOCK NUMBER	PART NUMBER	FSCM	DESCRIPTION USABLE ON CODE	U/M	QTY INC IN UNIT
52	58					1-RING		
						1-PLUG		
						1-WASHER		
						1-SEAL		
						GROUP 12 - FAN, WATER PUMP AND FAN		
53	1	PAOZZ	2930-00-133-9893	3051938-3	92392	FAN	EA	1
53	2	PCOZZ	3030-00-920-6712	4025619-0	92392	BELT, MATCHED SET	EA	1
55	3	PAOZZ	2930-00-133-9892	4025058-1	92392	PULLEY, PUMP	EA	1
53	4	XBOZZ		4025641-4	92392	SPACER: FAN	EA	1
53	5	PAOZZ	5310-00-261-7340	904206-0	92392	WASHER, LOCK: FAN MTG, 3/8 IN. ID	EA	7
53	6	PAOZZ		MS35304-74	96906	SCREW, CAP, HEXAGON HEAD: FAN MTG, 3/8-24 THD SIZE, 4 IN. LG	EA	4
54	1	PAOZZ		MS35297-91	96906	SCREW, CAP, HEXAGON HEAD: PUMP MTG, 3/8-16 THD SIZE, 2 IN. LG	EA	1
54	2	PAOZZ	5310-00-110-2761	4025139-9	92392	WASHER, TAB: PUMP MTG	EA	2
54	3	KFOZZ	5330-00-110-5689	4254816-4	92392	PACKING, PREFORMED: WATER PUMP (PART OF KIT, NSN 2815-00-135-8922)	EA	1
C 54	4	PAOZZ	5330-00-110-8744	74025106	92392	GASKET: INLET PIPE (PART OF KITS, NSN 2815-00-135-8922)	EA	1
54	5	KBOZZ		4027247-8	92392	PIPE, WATER INLET	EA	1
54	6	PAOZZ	4730-00-289-5176	444703	00000	PLUG, PIPE: INLET PIPE	EA	1
C 54	7	PAOZZ	5305-00-269-3214	MS90725-64	96906	SCREW, CAP, HEXAGON HEAD: PIPE MTG, 3/8-16 THD SIZE, 1 1/2 IN. LG	EA	2
54	8	PAOZZ	5310-00-637-9541	904206-0	92392	WASHER, LOCK: INLET PIPE, 3/8 IN. ID	EA	2
54	9	PAOZZ	5310-00-080-6004	MS27183-14	96906	WASHER, FLAT: PIPE MTG, 3/8 IN. ID	EA	2
54	10	PAOZZ	5310-00-637-9541	904206-0	92392	WASHER, LOCK: PUMP MTG, 3/8 IN. ID	EA	2
C 54	11	PAOZZ	5305-00-269-3212	MS90725-61	96906	SCREW, CAP, HEXAGON HEAD: PUMP MTG, 3/8-16 THD SIZE, 1 1/8 IN. LG	EA	2
54	12	PAOZZ		MS35295-71	96906	SCREW, CAP, HEXAGON HEAD: PUMP MTG, 3/8-16 THD SIZE, 3 1/4 IN. LG	EA	1
54	13	PAOFF	2930-111-5193	4026886-4	92392	PUMP ASSEMBLY, WATER	EA	1
55	1	XBFZZ		4025068-0	92392	HUB, PULLEY	EA	1
55	2	KFFZZ		4025064-9	92392	SHAFT AND BEARING ASSEMBLY (PART OF KIT, NSN 2930-00-920-6850)	EA	1
55		XAFZZ		4507084-4	92392	DEFLECTOR	EA	1
55	3	PAFZZ	5305-00-269-3212	MS90725-61	96906	SCREW, CAP, HEXAGON HEAD: PUMP BODY, 3/8-16 THD SIZE, 1 1/8 IN. LG	EA	2
55	4	PAFZZ	5310-00-080-6004	MS27183-14	96906	WASHER, LOCK: PLATE MTG, 3/8 IN. ID	EA	2
55	5	XAFZZ		4026091-1	92392	BODY, PUMP	EA	1
55	6	KFFZZ	5330-00-110-5676	4026887-2	92392	PACKING, PREFORMED: PUMP BODY TO HOUSING (PART OF KIT, NSN 2815-00-135-8922)	EA	1
55	7	KFFZZ		4025710-7	92392	SEAL ASSEMBLY (PART OF KIT, NSN 2930-00-920-6850)	EA	1
55	8	KFFZZ		4025067-2	92392	IMPELLER ASSEMBLY (PART OF KIT, NSN 2930-00-920-6850)	EA	1
55	9	XBFZZ		4025528-3	92392	HOUSING, OUTLET	EA	1
55	10	KFFZZ		4253819-9	96906	PACKING, PREFORMED: HOUSING MTG (PART OF KIT, NSN 2930-00-920-6850)	EA	1
56	1	XBOFF		4027021-7	92392	HOUSING, THERMOSTAT, UPPER	EA	1
56	2	PAOZZ	5310-00-010-3322	904207-8	92392	WASHER, LOCK: UPPER HOUSING 7/16 IN. ID	EA	4
56	3	PAOZZ	5305-00-069-5580	MS90725-96	96906	SCREW, CAP, HEXAGON HEAD: UPPER HOUSING MTG, 7/16-14 THD SIZE, 3 1/4 IN. LG	EA	2

	(1) ILLUSTRATION (a) FIG NO.	(b) ITEM NO.	(2) SMR CODE	(3) NATIONAL STOCK NUMBER	PART NUMBER	(5) FSCM	DESCRIPTION USABLE ON CODE	U/M	QTY INC IN UNIT
	56	4	PAOZZ	4730-00-289-5176	444703	00000	PLUG, PIPE: THERMOSTAT HOUSING	EA	2
	56	5	PAOZZ	4730-00-111-2509	MS35842-3	96906	CLAMP, HOSE: BY-PASS HOSE	EA	2
	56	6	PCOZZ	4720-00-110-1945	4027027-4	92392	HOSE: BY-PASS	EA	1
	56	7	PAOZZ	5305-00-018-0146	MS35297-86	96906	SCREW, CAP, HEXAGON HEAD: LOWER HOUSING MTG, 7/16-14 THD SIZE, 1 1/8 IN. LG	EA	2
	56	8	XBOZZ		4027023-3	92392	HOUSING, THERMOSTAT, LOWER	EA	1
C	56	9	PAOZZ	5330-00-930-5793	74025101	92392	GASKET: THERMOSTAT HOUSING	EA	1
	56	10	XBOZZ		4257247-8	92392	CONNECTOR: ELBOW OUTLET HOSE	EA	1
	56	11	PCOZZ	2930-00-112-0230	3043646-3	92392	HOSE, OUTLET	EA	1
	56	12	PAOZZ	4730-00-845-5449	36P	86295	CLAMP, HOSE: OUTLET HOSE	EA	2
	56	13	PAOZZ	4730-00-984-7175	2081-12-85	01267	BUSHING, PIPE: OUTLET TO ELBOW, 3/4 IN. X 1/2 IN.	EA	1
	56	14	PAOZZ		445751	24617	PLUG, PIPE: THERMOSTAT HOUSING	EA	1
C	56	15	PAOZZ	5330-00-408-6005	74027024	92392	GASKET: BETWEEN UPPER AND LOWER HOUSING	EA	1
	56	16	PAOZZ	6620-00-954-8686	MS35770-9	96906	THERMOSTAT	EA	1
	56	17	PCOZZ	5330-00-848-9943	4317554-6	92392	SEAL, THERMOSTAT	EA	1
	55		PAFFF	2930-00-920-6850	4025921-0	92392	REPAIR KIT, WATER PUMP (CONSISTS OF)	EA	1
	55	2					1-SHAFT		
	55	7					1-SEAL		
	55	8					1-IMPELLER		
	55	10					1-PACKING		
							GROUP 13 - ALTERNATOR AND STARTING MOTOR		
	57	1	PAOZZ		MS16203-15	96906	NUT, PLAIN, HEXAGON: BRACE TO ALTERNATOR	EA	1
	57	2	PAOZZ	5310-00-010-3320	MS35338-7	96906	WASHER, LOCK: BRACE TO ALTERNATOR	EA	1
	57	3	PAOZZ	5310-00-081-4219	MS27183-12	96906	WASHER, FLAT: BRACE TO ALTERNATOR	EA	2
	57	4	XBOZZ	2920-00-476-5454	4027327-8	92392	BRACE ADJUSTING	EA	1
	57	5	PAOZZ	5310-00-637-9541	904205-2	92392	WASHER, LOCK: ADJUSTING BRACE	EA	1
	57	6	PAOZZ	5306-00-225-8500	MS90725-35	96906	SCREW, CAP, HEXAGON HEAD: ADJUSTING BRACE	EA	2
	57	7	PAOZZ	2920-00-133-9885	4026031-7	92392	BRACKET, ALTERNATOR MOUNTING	EA	1
	57	8	PAOZZ	5310-00-637-9541	904206-00	92392	WASHER, LOCK: BRACKET MTG	EA	5
	57	9	PAOZZ	5305-00-269-4511	MS90725-63	96906	SCREW, CAP, HEXAGON HEAD: BRACKET MTG	EA	3
	57	10	PAOZZ		MS35297-73	96906	SCREW, CAP, HEXAGON HEAD: BRACKET MTG	EA	1
	57	11	PAOZZ	5305-00-018-0127	919226-1	92392	SCREW, CAP, HEXAGON HEAD: ALTERNATOR MTG	EA	1
	57	12	PAOHH	2920-00-113-0693	MH24N901G	94990	GENERATOR, ALTERNATOR	EA	1
	57	13	XBOZZ	5305-00-145-8496	43A44663B01	94990	SPACER, FAN	EA	1
	57	14	PAOZZ	2920-00-133-9889	49C44649B03	94990	FAN	EA	1
	57	15	PAOZZ	3020-00-155-8895	4027238-9	94990	PULLEY, ALTERNATOR	EA	1
	57	16	XBOZZ		4A41436A03	94990	WASHER, LOCK: PULLEY	EA	1
	57	17	PAOZZ	5310-00-115-6224	2A41435A03	94990	NUT, PULLEY	EA	1
	58	1	XBOZZ	2920-00-133-9890	15D44434B05	94990	HOUSING, FRONT	EA	1
	58	2	PAHZZ	3110-00-193-9049	43B44138A03	94950	BEARING: DRIVE END	EA	1
	58	3	XBHZZ		42A44373AA03	94990	RETAINER, BEARING	EA	1

	ILLUSTRATION (a) FIG NO.	(b) ITEM NO.	SMR CODE	NATIONAL STOCK NUMBER	PART NUMBER	FSCM	DESCRIPTION USABLE ON CODE	U/M	QTY INCI-IN UNIT
	58	4	PAHZZ		1P41123A02	94990	ROTOR	EA	1
	58	5	PAHZZ	3110-00-350-6446	43B40562A03	94990	BEARING: COMMUTATOR END	EA	1
	58	6	PAHZZ	2920-00-406-9015	1P44811A31	94990	STATOR	EA	1
	58	7	PAFZZ	5961-00-111-5067	48C44293B15	94990	SEMICONDUCTOR DEVICE: POSITIVE DIODE	EA	1
	58	8	PAHZZ	5970-00-136-1335	4A40569A01	94990	WASHER, INSULATION	EA	1
	58	9	PAFZZ	5961-00-111-5068	48C44293B16	94990	SEMICONDUCTOR DEVICE: NEGATIVE DIODE	EA	5
	58	10	PAHZZ	3120-00-938-0967	43A44933A01	94990	SLEEVE	EA	2
R	58	11	PAHZZ	5330-00-470-9056	42A40908A03	94990	RETAINER, BEARING	EA	1
	58	12	PAHZZ		15D44543A10	94990	HOUSING, REAR	EA	1
	58	13	PAFZZ	5977-00-116-3625	39C44355B02	94990	BRUSH ASSEMBLY	EA	1
	58	14	XAFZZ	2920-00-133-9886	26A44249B01	94990	SHIELD: BRUSH	EA	1
R	58	15	PAFZZ	5305-00-235-6075	4S136282	94990	SCREW: BRUSH MTG	EA	2
R	58	16	PAFZZ	5310-00-173-3072	2S136307	94990	NUT, LOCK	EA	6
	58	17	PAFZZ	5970-00-144-7307	4A40771A01	94990	WASHER, INSULATION	EA	2
	58	18	PAHZZ	5306-00-115-6250	3B41741A09	94990	BOLT, THRU	EA	4
R	58	19	PAHZZ	5310-00-173-0118	2S119468	94990	NUT: INSULATOR	EA	2
	58	20	PAHZZ	5970-00-136-1335	4A40569A01	94990	WASHER, INSULATOR	EA	1
	58	21	PAHZZ	5970-00-401-4610	14A40627A04	94990	INSULATOR	EA	1
	58	22	PAFZZ	5961-00-111-5066	48C44532A11	94990	SEMICONDUCTOR DEVICE: INSULATION DIODE	EA	1
R	58	23	PAHZZ	5310-00-115-6225	2A40631A05	94990	NUT, PLAIN, SQUARE; THRU BOLT	EA	4
R	58	24	PAOZZ	5315-00-115-1497	55A41437A01	94990	KEY, WOODRUFF; FAN AND PULLEY	EA	1
	58	24	XAHZZ		1A44282A01	94990	SLIP RING ASSEMBLY, ROTOR	EA	1
	58	24	PAHZZ		4059921-9	94990	INSULATOR	EA	1
	58	24	XAHZZ		A3A44255A01	94990	SCREW, ROTOR SHAFT	EA	1
	58	24	XAHZZ		14A44025B01	94990	INSULATOR, BRUSH	EA	1
	58	24	XAHZZ		15B44544A06	94990	COVER ASSEMBLY, REAR HOUSING	EA	1
	58	24	PAHZZ		3B44209B06	94990	SCREW, TAPPING: COVER MTG, NO. 8-32 THD SIZE, 3/4 IN. LG	EA	2
R	58	24	PAHZZ	5306-00-231-7717	3B40568A12	94990	BOLT, CARRIAGE; NO. 10-24 THD SIZE, 1 3/8 IN. LG	EA	1
	58	24	XAHZZ		30C44557A14	94990	TERMINAL, BRUSH	EA	1
	58	24	XAHZZ		4S136290	94490	WASHER, FLAT: 7/16 IN. DIA	EA	1
	58	24	XAHZZ		14A40770A01	94490	INSULATOR, BAKELITE	EA	1
	58	24	XAHZZ		32B44556B01	94990	GASKET, FELT	EA	1
	59	1	PAOZZ	2920-00-111-5194	70C44832B01	94990	REGULATOR, VOLTAGE	EA	1
	59	2	PAOZZ	5305-00-068-0502	MS90725-6	96906	SCREW, CAP, HEXAGON HEAD: REGULATOR MTG	EA	3
	59	3	PAOZZ	5310-00-010-3319	904204-5	92392	WASHER, LOCK: REGULATOR MTG	EA	3
	59	4	PAOZZ	5310-00-010-9084	109084	00000	NUT, PLAIN, HEXAGON: REGULATOR MTG	EA	3

(1) ILLUSTRATION (a) FIG NO.	(1) ILLUSTRATION (b) ITEM NO.	(2) SMR CODE	(3) FEDERAL STOCK NUMBER	(4) PART NUMBER	(5) FSCM	(6) DESCRIPTION USABLE ON CODE	(7) U/M	(8) QTY INC IN UNIT
C 60	1	PAOZZ	2920-110-9695	3052160-3	92392	WIRE, CABLE: STARTER	EA	1
C 60	2	XBOZZ	3805-482-8932	4025429-4	92392	ADAPTER, STARTER	EA	1
C 60	3	PAOZZ	5310-820-6653	MS35338-60	96906	WASHER, LOCK: STARTER MTG	EA	3
C 60	4	PAOZZ	5305-727-3804	MS90725-165	96906	SCREW, CAP, HEXAGON HEAD: STARTER MTG	EA	3
C 60	5	PAOHH	2920-081-1646	1113868	16764	STARTER, ENGINE, ELECTRICAL	EA	1
C 61	1	PAHZZ	5310-965-6000	9412305	16764	NUT, PLUNGER ROD	EA	1
C 61	2	XBHZZ	5365-715-1152	9415235	16764	RING, RETAINING: PLUNGER	EA	1
C 61	3	PAHZZ	5310-822-2241	1948526	16764	WASHER, RECESSED	EA	1
C 61	4	PAHZZ	2920-812-0196	1948521	16764	SPRING, HELICAL, COMPRESSION: PLUNGER	EA	1
C 61	5	PAHZZ	5310-822-2236	1948520	16764	RETAINER, SPRING	EA	1
C 61	6	PAFZZ	2920-839-1864	1949618	16764	BOOT: PLUNGER	EA	1
C 61	7	XBFZZ	5310-062-2051	1948519	16764	WASHER: BOOT	EA	1
C 61	8	PAFZZ	5330-550-7315	1909531	16764	PACKING, PREFORMED: COMMUTATOR END	EA	1
C 61	9	PAHZZ	5305-758-8114	1962048	16764	SCREW: BRUSH HOLDER, LONG, GROUND	EA	2
C 61	10	XAHZZ	5360-754-2213	1861785	16764	SPRING, HELICAL, TORSION: BRUSH	EA	8
C 61	11	PAFZZ	5305-889-3002	MS35206-242	96906	SCREW, MACHINE: BRUSH	EA	8
C 61	12	PAFZZ	5310-045-3296	453435	16764	WASHER, LOCK: BRUSH HOLDER SCREW	EA	8
C 61	13	PAFZZ	5977-754-8153	1946407	16764	BRUSH	EA	8
C 61	14	XAFZZ	5977-284-7628	1907475	16764	HOLDER, BRUSH	EA	4
C 61	15	XAFZZ	5365-353-9839	1914640	16764	PLATE, SPACER: GROUND BRUSH	EA	2
C 61	16	XAFZZ	2920-821-2938	1948516	16764	PLATE, WITH STUD	EA	1
C 61	17	PAFZZ		9417096	16764	SCREW, MACHINE: PLATE MTG	EA	3
C 61	18	XAFZZ	5310-291-4498	1913080	16764	WASHER, INSULATION: PLATE MTG	EA	8
C 61	19	XAFZZ	5970-416-4104	1909523	16764	PLATE, INSULATOR	EA	1
C 61	20	PAFZZ		1914647	16764	WASHER, FLAT: TERMINAL STUD	EA	3
C 61	21	PAHZZ	5977-786-9564	1948515	16764	PLATE ASSEMBLY	EA	1
C 61	22	PAFZZ	3120-662-2926	826468	16764	BEEARING, SLEEVE: COMMUTATOR END	EA	1
C 61	23	PAHZZ	2920-086-7979	1951073	16764	PLATE: COMMUTATOR END	EA	1
C 61	24	PAFZZ		9417501	16764	PLUG, RETAINING: OIL RESERVOIR	EA	3
C 61	25	PAFZZ		1916439	16764	WICK, OIL	EA	1
C 61	26	PAFZZ	5970-734-8918	1918690	16764	BUSHING, INSULATION: TERMINAL STUD	EA	1
C 61	27	PAFZZ	5970-734-8919	1918687	16764	BUSHING, INSULATION: TERMINAL STUD	EA	1
C 61	28	PAFZZ		9421427	16764	WASHER, LOCK: TERMINAL STUD	EA	2
C 61	29	PAFZZ	5310-764-3153	453287	24617	NUT, PLAIN, HEXAGON: TERMINAL STUD	EA	1
C 61	30	PAFZZ		453285	16764	NUT, PLAIN, HEXAGON: TERMINAL STUD	EA	1
C 61	31	PAFZZ	5340-282-1668	453894	16764	PLUG, EXPANSION: END PLATE	EA	1
C 61	32	PAFZZ	5306-550-9129	1914869	16764	SCREW, MACHINE: PLATE MTG	EA	4
C 61	33	PAFZZ	5310-045-3299	453299	16764	WASHER, LOCK: PLATE MTG	EA	8
C 61	34	PAFZZ	2920-636-8918	1953236	16764	LEAD, ELECTRICAL	EA	1
C 61	35	XAFZZ		1861791	24617	WASHER, INSULATOR	EA	1
C 61	36	XAFZZ	5970-353-9842	1914644	16764	PLATE, SPACER: INSULATED BRUSH	EA	2
C 61	37	XAFZZ		1965093	16764	INSULATOR, HOLDER	EA	2
C 61	38	PAHFF	5305-616-4831	1914642	16764	SCREW: BRUSH HOLDER, INSULATOR BRUSH	EA	2

(1) ILLUSTRATION (a) FIG NO.	(b) ITEM NO.	(2) SMR CODE	(3) FEDERAL STOCK NUMBER	(4) PART NUMBER	(5) FSCM	(6) DESCRIPTION USABLE ON CODE	(7) U/M	(8) QTY INC IN UNIT
61	39	PAHZZ	5305-758-8116	1962047	16764	SCREW; BRUSH HOLDER, LONG INSULATING	EA	2
61	40	PAHZZ	5305-543-2753	1914800	16764	SCREW; BRUSH HOLDER, GROUND BRUSH	EA	2
61	41	XBHZZ	5330-914-0703	1964857	16764	GASKET, PLUG	EA	1
61	42	XBHZZ	5365-957-1826	1945356	16764	PLUG, HOUSING	EA	1
61	43	PAFZZ	5306-775-5209	1930611	16764	BOLT, MACHINE; RELAY MTG	EA	1
61	44	PAFZZ	2920-807-2408	1119848	16764	RELAY, SOLENOID	EA	1
62	1	PAHZZ		1914842	16764	WASHER, THRUST	EA	1
62	2	PAHZZ	2920-777-7166	1945500	16764	ARMATURE	EA	1
62	3	PAHZZ	2920-888-8613	1945496	16764	WINDING, FIELD	EA	1
62	4	XAHZZ				FRAME, STARTER	EA	1
62	5	PAHZZ		1964294	16764	SCREW; POLE SHOE	EA	8
62	6	PAHZZ	3120-661-8951	1923484	16764	BEARING, SLEEVE; LEVER HOUSING	EA	1
62	7	PAHZZ	2920-732-5220	800066	16764	DRIVE ASSEMBLY, STARTER	EA	1
62	8	XAHZZ		1945487-1	16764	DRIVE ASSEMBLY	EA	1
62	9	XAHZZ	2920-214-2341	1968225	16764	SEAT, SPRING	EA	2
62	10	XAHZZ	5360-721-5333	1943242	16764	SPRING, HELICAL, COMPRESSION	EA	1
62	11	XAHZZ	3020-823-6022	1948533	16764	GEAR, DRIVE	EA	1
62	12	XAHZZ	2920-999-2400	1945490	16764	CUP	EA	1
62	13	XAHZZ	5310-498-2965	1966651	16764	WASHER, SPLIT; GEAR	EA	1
62	14	PAHZZ	5306-783-5183	1948536	16764	BOLT, MACHINE; DRIVE HOUSING MTG	EA	5
62	15	PAHZZ	2920-877-2227	1949606	16764	HOUSING, DRIVE	EA	1
62	16	PAHZZ	3120-720-3507	1942258	16764	BEARING, SLEEVE; DRIVE HOUSING	EA	1
62	17	PAHZZ	2920-865-8270	1916439	16764	WICK, OIL	EA	2
62	18	XBHZZ	4730-011-8831	118831	24617	PLUG, PIPE	EA	2
62	19	PAHZZ	5306-783-5188	1948537	16764	SCREW, CAP, SOCKET HEAD; DRIVE HOUSING MTG	EA	1
62	20	PAHZZ		9420423	24617	WASHER, LOCK; LEVER HOUSING MTG	EA	5
62	21	PAHZZ	5306-550-9129	1914869	16764	SCREW, CAP, SOCKET HEAD; LEVER HOUSING MTG	EA	5
62	22	PAHZZ	5340-715-1152	9415235	16764	RING, RETAINING; LEVER GUIDE	EA	2
62	23	XBHZZ	2920-034-4216	1948529	16764	SHAFT, LEVER	EA	1
62	24	PCHZZ	5330-260-9311	1914373	16764	PACKING, PREFORMED	EA	1
62	25	PCHZZ	5330-842-1901	1948538	16764	GASKET; DRIVE HOUSING	EA	1
62	26	PAHZZ	5310-297-7319	1911644	16764	WASHER, THRUST	EA	1
62	27	PAHZZ		1945484	16764	LEVER, SHIFT	EA	1
62	28	XBHZZ	2920-821-2943	1951069	16764	HOUSING, LEVER	EA	1
62	29	PCHZZ	5330-997-9020	1921805	16764	PACKING, PREFORMED; LEVER HOUSING MTG	EA	1
62	30	PCHZZ	5330-285-9480	1918047	16764	SEAL, OIL	EA	1
62	31	PAHZZ	5310-081-2658	1936466	16764	WASHER, THRUST	EA	1
62	32	PAFZZ	5310-752-7673	1922457	16764	WASHER, INSULATOR; FIELD TERMINAL STUD	EA	2
62	33	PAFZZ	5310-227-1915	1914647	16764	WASHER, FLAT; FIELD TERMINAL STUD	EA	1
62	34	PAFZZ	5310-784-3153	453287	16764	NUT, PLAIN, HEXAGON; FIELD TERMINAL STUD	EA	2
62	35	PAFZZ	5935-821-2944	1945468	16764	CONNECTOR	EA	1
62	36	PAFZZ	5310-637-9547	MS35339-44	96906	WASHER, LOCK; FIELD TERMINAL STUD	EA	4

ILLUSTRATION (a) FIG NO.	(b) ITEM NO.	SMR CODE	NATIONAL STOCK NUMBER	PART NUMBER	FSCM	DESCRIPTION USABLE ON CODE	U/M	QTY INC IN UNIT
62	37	PCHZZ	5330-00-445-2984	1945649	16764	GASKET, STUD	EA	1
62	38	PAHZZ	5970-00-657-8133	1965472	16764	BUSHING, INSULATOR: TERMINAL STUD	EA	1
62	39	PAHZZ	2920-00-999-2526	1934478	16764	POLE SHOE	EA	4
62		PCFZZ	5330-00-599-2321	1916272	16764	PACKING, PREFORMED	EA	2
62		XBHZZ		1949608	16764	PLUG, EXPANSION: LEVER HOUSING	EA	1
62		XBHZZ	4730-00-964-7548	1961573	16764	PLUG, PIPE: DRIVE HOUSING	EA	1
62		XBFZZ	5340-00-957-1826	1945356	16764	PLUG: BRUSH ACCESS	EA	1
62		XBFZZ	5330-00-914-0703	1964857	16764	GASKET, PLUG	EA	1
62		XBHZZ	5970-00-034-5015	1955990	16764	INSULATION, WINDING	EA	1
62		XBHZZ	2920-00-737-3225	1914873	16764	INSULATION, WINDING	EA	2
						GROUP 14 - MANIFOLD		
63	1	PAOZZ	2815-00-133-9993	4025720-6	92392	MANIFOLD, EXHAUST, REAR	EA	1
C 63	2	PAOZZ		74027014	92392	GASKET: MANIFOLD, EXHAUST	EA	6
63	3	PAOZZ	2815-00-133-9990	74028795	92392	MANIFOLD, EXHAUST, CENTER	EA	1
63	4	PAOZZ	2815-00-133-9991	4025719-8	92392	MANIFOLD, EXHAUST, FRONT	EA	1
63	5	PAOZZ	4730-00-012-7951	127951	00000	PLUG, PIPE: MANIFOLD, 1/4 IN. NPT, BRASS	EA	1
63	6	PAOZZ	5305-00-053-8993	MS90725-112	96906	SCREW, CAP, HEXAGON HEAD: MANIFOLD MTG, 1/2-13 THD SIZE, 1 3/8 IN. LG	EA	12
63	7	PAOZZ		4025165-4	92392	WASHER, FLAT: MANIFOLD MTG, 1/2 IN. ID	EA	12
C 64	1	PAOZZ		74026579	92392	GASKET; MANIFOLD	EA	1
64	2	PAOZZ	2990-00-133-9897	4025050-8	92392	MANIFOLD, INTAKE	EA	1
64	3	PAOZZ	4730-00-044-4864	444854	00000	PLUG, PIPE: MANIFOLD	EA	1
C 64	4	PAOZZ	5305-00-269-3212	MS90725-61	96906	SCREW, CAP, HEXAGON HEAD: MANIFOLD MTG	EA	16
64	5	PAOZZ	5310-00-261-7340	904206-0	92392	WASHER, LOCK: MANIFOLD MTG	EA	16
64	6	PAOZZ	5310-00-080-6004	MS27183-14	96906	WASHER, FLAT: MANIFOLD MTG	EA	16
						GROUP 15 - OIL PAN AND OIL PUMP		
65	1	PCHZZ	5330-00-110-5677	4026602-5	92392	GASKET SET, PAN	EA	1
65	2	PAHZZ	5305-00-269-3211	MS90725-60	96906	SCREW, CAP, HEXAGON HEAD: OIL PAN	EA	7
65	3	PAHZZ	5310-00-637-9541	904206-0	92392	WASHER, LOCK: OIL PAN	EA	37
65	4	PAHZZ	5310-00-080-6004	MS15795-14	96906	WASHER, FLAT: OIL PAN	EA	1
65	5	PAHZZ	2815-00-133-9992	4026600-9	92392	PAN, OIL	EA	1
65	6	PAHZZ	5305-00-269-3210	MS90725-59	96906	SCREW, CAP, HEXAGON HEAD: OIL PAN	EA	25
65	7	PAOZZ	4730-00-406-6780	4027320-3	92392	PLUG, MAGNETIC: OIL DRAIN	EA	1
65	8	PAHZZ	5305-00-269-3209	MS90725-58	96906	SCREW, CAP, HEXAGON HEAD: OIL PAN	EA	5
66	1	PBHZZ		4026587-8	92392	BRACKET, SUPPORT	EA	1
66	2	PAHZZ	5310-00-010-3320	MS35338-7	96906	WASHER, LOCK: BRACKET	EA	1
66	3	PAHZZ	5305-00-229-0417	4255055-8	92392	SCREW, CAP, HEXAGON HEAD: BRACKET	EA	1
66	4	PCHZZ	3930-00-807-6730	923934-4	92392	PACKING, PREFORMED: OIL TUBES	EA	4
66	5	PAHZZ	4710-00-115-0487	4026993-8	92392	TUBE, OIL OUTLET	EA	1
66	6	PAHZZ		921331-5	92392	NUT, TUBE COUPLING: TUBE	EA	1
66	7	PAHZZ	4710-00-115-0486	4026930-0	92392	TUBE, OIL INLET	EA	1
66	8	PAHZZ	5305-00-229-0417	4255055-8	92392	SCREW, CAP, HEXAGON: OIL TUBE (SPECIAL)	EA	1
66	9	PAHZZ	2815-00-133-9989	4026603-3	92392	SCREEN, OIL	EA	1

(1) ILLUSTRATION (a) FIG NO.	(b) ITEM NO.	(2) SMR CODE	(3) NATIONAL STOCK NUMBER	(4) PART NUMBER	(5) FSCM	(6) DESCRIPTION USABLE ON CODE	(7) U/M	(8) QTY INC IN UNIT
66	10	PAHZZ	5305-00-042-6417	MS90725-113	96906	SCREW, CAP, HEXAGON HEAD: OIL PUMP MTG	EA	1
66	11	PAHZZ	5310-00-010-3323	MS35338-10	96906	WASHER, LOCK: OIL PUMP MTG	EA	2
66	12	PAHZZ	5305-00-071-1774	MS90725-121	96906	SCREW, CAP, HEXAGON HEAD: OIL PUMP MTG	EA	1
66	13	PAHZZ	5306-00-225-8506	MS90725-42	96906	SCREW, CAP, HEXAGON HEAD: BRACKET	EA	1
66	14	PAHHD	2815-00-110-9592	4026934-2	92392	PUMP ASSEMBLY, OIL	EA	1
67	1	PAHZZ	2815-00-110-9598	4026605-8	92392	GEAR, SPUR: OIL PUMP DRIVE	EA	1
67	2	PAHZZ		4254864-4	92392	BOLT, SELF-LOCKING: COVER MTG	EA	2
67	3	XBHZZ		4026611-6	92392	COVER ASSEMBLY	EA	1
67	4	PAHZZ	3120-00-111-7369	4026618-1	92392	BEARING, SLEEVE: PUMP SHAFT	EA	5
67	5	PAHZZ	2815-00-110-9594	4026616-5	92392	GEARSHAFT, DRIVING	EA	1
67	6	XAHZZ		4026935-9	92392	BODY ASSEMBLY, PUMP	EA	1
67	7	PAHZZ	5315-00-014-1240	141240	00000	PIN, DOWEL	EA	2
67	8	PAHZZ	2815-00-110-9596	4026615-7	92392	SHAFT, IDLER	EA	1
67	9	PAHZZ	2815-00-110-9597	4026937-5	92392	GEAR ASSEMBLY, IDLER	EA	1
67	10	XBHZZ		4026596-9	92392	COVER ASSEMBLY	EA	1
67	11	PAHZZ	5310-00-010-3320	MS35338-7	96906	WASHER, LOCK: COVER MTG	EA	6
67	12	PAHZZ	5306-00-225-8499	MS90725-34	96906	SCREW, CAP, HEXAGON HEAD: COVER MTG	EA	3
67	13	PAHZZ	2815-00-110-9593	4026941-7	92392	VALVE ASSEMBLY, RELIEF	EA	1
67	14	XAHZZ		4354572-2	92392	BODY, VALVE	EA	1
67	15	XAHZZ	5315-00-753-3894	MS16562-238	96906	PIN, SPRING: VALVE	EA	1
67	16	XAHZZ		4354571-4	92392	PISTON, VALVE	EA	1
67	17	PAHZZ		913168-1	92392	WASHER, FLAT: VALVE	EA	1
67		XAHZZ		2046942-5	92392	SPRING, HELICAL, COMPRESSION	EA	1
67	19	PAHZZ	5306-00-225-8505	MS90725-41	96906	SCREW, CAP, HEXAGON HEAD: COVER MTG	EA	1
67	20	PAHZZ	2815-00-133-9989	4026603-3	92392	SCREEN, OIL	EA	1
67	21	PAHZZ	3020-00-110-3661	4026606-6	92392	GEAR, SPUR	EA	1
67	22	PAHZZ	2815-00-110-9595	4026971-4	92392	GEARSHAFT, DRIVEN	EA	1
67	23	PAHZZ	5306-00-225-8499	MS90725-34	96906	SCREW, CAP, HEXAGON HEAD: COVER MTG	EA	6
67		XAHZZ		4026938-3	92392	GEAR, SPUR	EA	1
67		XAHZZ		4026612-4	92392	COVER	EA	1
67		PAHZZ	5340-00-132-3645	4255103-6	92392	PLUG, EXPANSION	EA	1
67		XAHZZ		4026613-2	92392	COVER	EA	1
						GROUP 16 - FLYWHEEL AND HOUSING		
68	1	KFFZZ	5330-00-110-5687	4025097-9	92392	PACKING, PREFORMED: HOUSING TO BLOCK (PART OF KIT, NSN 2815-00-135-8922)	EA	1
68	2	KFFZZ	5330-00-492-6023	4020879-5	92392	PACKING, PREFORMED: FLYWHEEL HOUSING (PART OF KIT, NSN 2815-00-135-8922)	EA	1
68	3	PAHZZ	5315-00-358-2448	4500300-1	92392	PIN, DOWEL: FLYWHEEL	EA	2
68	4	PAHZZ	5315-00-011-2129	112129	00000	PIN, DOWEL: FLYWHEEL HOUSING	EA	2
68	5	PAHZZ	2815-00-133-9987	4025624-0	92392	HOUSING, FLYWHEEL	EA	1
68	6	PCHZZ		74029502	92392	KIT, OIL SEAL, REAR (USE WITH SLEEVE KIT P/N 74029556)	EA	1
		KFHZZ		74029399		1-SEAL		
		KFHZZ		74029503		1-INSTRUCTION SHEET		
68	7	PCHZZ		74029556	92392	KIT, SLEEVE, WEAR (USE WITH SEAL KIT P/N 74029502) (CONSISTS OF:)	EA	1

ILLUSTRATION (a) FIG NO.	(b) ITEM NO.	SMR CODE	NATIONAL STOCK NUMBER	PART NUMBER	FSCM	DESCRIPTION USABLE ON CODE	U/M	QTY INC IN UNIT
		KFNZZ				1-SLEEVE	EA	8
		KFNZZ		74029503		1-INSTRUCTION SHEET	EA	8
68	8	PANZZ	5310-00-584-5272	MS35338-48	96906	WASHER, LOCK; FLYWHEEL HOUSING	EA	8
68	9	PANZZ	5305-00-543-2865	MS35297-111	96906	SCREW, CAP, HEXAGON HEAD; FLYWHEEL HOUSING	EA	8
68	10	PAOZZ	4730-00-044-4619	444619	00000	PLUG, PIPE: FLYWHEEL HOUSING	EA	1
68	11	XBHZZ		4025427-8	92392	COVER, ACCESS: FLYWHEEL	EA	1
68	12	PANZZ	5310-00-010-3315	904204-5	92392	WASHER, LOCK: ACCESS COVER	EA	2
68	13	PANZZ	5305-00-068-7837	MS90728-5	96906	SCREW, CAP, HEXAGON HEAD: ACCESS COVER	EA	2
69	1	PANZZ	2815-00-115-0225	4025765-1	92392	FLYWHEEL	EA	1
69	2	PANZZ	3020-00-033-6049	4350235-0	92392	GEAR, RING	EA	1
69		PANZZ	2815-00-147-1935	4027282-5	92392	SLEEVE KIT, WEAR	EA	1
69	3	PANZZ	5305-00-719-5219	MS90727-111	96906	SCREW, CAP, HEXAGON HEAD: FLYWHEEL	EA	6
						GROUP 17 - CYLINDER HEAD AND VALVES		
70	1	PAFZZ		4153776-2	92392	SCREW, CAP, HEXAGON HEAD: CYLINDER HEAD COVER	EA	10
70	2	PAFZZ	5310-00-110-2762	4025491-4	92392	WASHER: CYLINDER HEAD COVER	EA	10
70	3	PAFZZ	2815-00-115-0224	4025555-6	92392	COVER: CYLINDER HEAD	EA	1
70	4	PAOZZ	5330-00-920-6835	74025472	92392	GASKET: CYLINDER HEAD COVER	EA	1
70	5	PAOZZ	4730-00-585-8582	4253977-5	92392	CLAMP, HOSE: BREATHER	EA	2
70	6	PCOZZ	2940-00-367-0024	4650229-0	92392	HOSE, BREATHER	EA	1
70	7	PAOZZ	2815-00-110-9601	4025993-9	92392	TUBE, BREATHER	EA	1
70	8	XBOZZ		4025621-6	92392	CLAMP, LOOP: BREATHER TUBE	EA	1
70	9	XBFZZ		4025177-9	92392	EYE, LIFTING	EA	2
70	10	PAOZZ	5310-00-012-0377	MS35690-606	96906	NUT, PLAIN, HEXAGÓN: CLAMP MTG	EA	1
70	11	PAOZZ	5310-00-261-7340	904206-0	92392	WASHER, LOCK: CLAMP MTG	EA	1
70	12	PAOZZ	5310-00-186-7448	MS15795-14	96906	WASHER, FLAT: CLAMP MTG	EA	1
70	13	XBOZZ		4025992-1	92392	BRACKET, CLAMP	EA	1
70	14	XBOZZ		4025914-5	92392	CLAMP, LOOP: BREATHER TUBE	EA	1
70	15	PAOZZ	5305-00-269-3209	MS90725-58	96906	SCREW, CAP, HEXAGON HEAD: CLAMP MTG	EA	1
70	16	PAOZZ		74027598	92392	GASKET; CYLINDER HEAD	EA	1
70	17	PAOZZ		74027013	92392	GASKET: RING, FIRE	EA	6
70	18	PAFZZ	2815-00-920-6837	4025179-5	92392	VALVE, INTAKE	EA	6
70	19	PAFZZ	2815-00-930-5795	4025182-9	92392	VALVE, EXHAUST	EA	6
70	20	PAHZZ	2815-00-920-6833	4025185-2	92392	SEAT, VALVE INSERT, EXHAUST	EA	6
70	21	PAHZZ	2815-00-110-3660	4025186-0	92392	SEAT, VALVE INSERT, INTAKE	EA	6
70	22	PAHZZ	2815-00-930-5791	4020682-3	92392	GUIDE, VALVE	EA	12
70	23	PAFZZ	2815-00-920-6834	4025242-1	92392	SPRING ASSEMBLY, VALVE	EA	12
70	24	PAFZZ	2815-00-352-3200	4343799-5	92392	RETAINER, SPRING	EA	12
70	25	PAFZZ	2815-00-073-8147	4376497-6	92392	LOCK, VALVE SPRING, HALF	EA	24
70	26	PAFZZ	5305-00-111-5559	4025156-2	92392	SCREW, CAP, HEXAGON HEAD: CYLINDER HEAD	EA	6
70	27	PAFZZ	5305-00-111-5554	4025164-7	92392	SCREW, CAP, HEXAGON HEAD: CYLINDER HEAD	EA	20
70	28	PAFZZ		4025165-4	92392	WASHER: CYLINDER HEAD	EA	26
70	29	PAFHH	2815-00-930-9311	4026228-9	92392	HEAD, CYLINDER	EA	1
70	30	PAFZZ	4730-00-044-4710	444710	00000	PLUG, PIPE: CYLINDER HEAD	EA	5

ILLUSTRATION (a) FIG NO.	(b) ITEM NO.	SMR CODE	NATIONAL STOCK NUMBER	PART NUMBER	FSCM	DESCRIPTION USABLE ON CODE	U/M	QTY INC IN UNIT
70	31	PAFZZ	5340-00-228-2982	4255107-7	92392	PLUG, EXPANSION: CYLINDER HEAD	EA	5
						GROUP 18 - PISTONS, CONNECTING RODS AND CRANKSHAFT		
71	1	PAHZZ	5365-00-401-2034	4025299-1	92392	SHIM, SLEEVE: .010 IN. THK	EA	V
71	1	PAHZZ	5365-00-401-2033	4025300-7	92392	SHIM, SLEEVE: .015 IN. THK	EA	V
71	1	PAHZZ	5365-00-401-1999	4025301-5	92392	SHIM, SLEEVE: .020 IN. THK	EA	V
71	1	PAHZZ	5365-00-401-2035	4025298-3	92392	SHIM, SLEEVE; .005 IN. THK	EA	1
71		PCHZZ	2815-00-456-5608	4027157-9	92392	REPAIR KIT, CYLINDER SLEEVE (CONSISTS OF)	EA	6
71	2	XAHZZ	2815-00-930-9313	4026578-7	92392	SLEEVE, CYLINDER	EA	1
71	3	PCHZZ	5330-00-930-9270	4025015-1	92392	PACKING, PREFORMED: CYLINDER SLEEVE, LOWER	EA	2
71	4	PAHZZ	2815-00-483-0702	4026497-0	09367	PISTON	EA	1
71	5	PAHZZ	2815-00-102-2585	4026981-3	09367	RING SET, PISTON	EA	1
71	6	PAHZZ	2815-00-930-9316	4254608-5	92392	RING, RETAINING	EA	2
71	7	PAHZZ	2815-00-480-7358	4026505-0	09367	PIN, PISTON	EA	1
71		XCHZZ		4025397-3	92392	SHEET, INSTRUCTION	EA	1
71	8	PAHZZ	2815-00-930-9315	4025030-0	92392	BEARING, ROD	EA	6
71	9	PAHHH	2815-00-930-9329	4026353-5	92392	CONNECTING ROD ASSEMBLY	EA	6
71	10	PAHZZ	5305-00-248-5970	4026352-7	92392	SCREW, CAP, HEXAGON HEAD	EA	12
71	11	PAHZZ	5310-00-400-8524	4025070-6	92392	WASHER, FLAT	EA	12
71	12	PAHZZ		4025031-8	92392	BEARING, SLEEVE	EA	6
72	1	PAHZZ	5305-00-297-0724	595540	00000	SCREW, CAP, HEXAGON HEAD: CRANKSHAFT PULLEY	EA	1
72	2	PAHZZ	5310-00-115-6239	4025115-9	92392	WASHER: PULLEY	EA	1
72	3	PAHZZ	3805-00-115-0483	4025589-5	92392	PULLEY, CRANKSHAFT	EA	1
72	4	PAHZZ	2815-00-930-9312	4025041-7	92392	GEAR, CRANKSHAFT	EA	1
72	5	PAHZZ	5315-00-011-2139	905845-4	92392	KEY, WOODRUFF: PULLEY	EA	1
72	6	PAHZZ	5315-00-011-2139	905845-4	92392	KEY, WOODRUFF; CRANKSHAFT GEAR	EA	1
72	7	PAHZZ	2815-00-930-9331	4025006-0	92392	BEARING: UPPER FRONT AND INTERMEDIATE	EA	5
72	8	PAHZZ	2815-00-930-9334	4025008-6	09367	BEARING: UPPER REAR AND CENTER	EA	2
72	9	XAHZZ	2815-00-930-9308	4025010-2	92392	FLANGE: BEARING, UPPER	EA	2
72	10	XAHZZ	2815-00-930-9307	4025011-0	92392	FLANGE: BEARING, LOWER	EA	2
72	11	XAHZZ		4251746-6	92392	PIN, GROOVE	EA	4
72	12	PAHHD	2815-00-930-9324	4025478-1	92392	CRANKSHAFT	EA	1
72	13	PAHZZ	4730-00-044-4619	444619	00000	PLUG, PIPE	EA	1
72	14	PAHZZ	2815-00-930-9309	4025009-4	92392	BEARING: LOWER REAR AND CENTER	EA	2
72	15	PAHZZ	2815-00-930-9330	4025007-8	92392	BEARING: LOWER FRONT AND INTERMEDIATE	EA	5
						GROUP 19 - CAMSHAFT AND ROCKER ARMS		
73	1	XBFZZ		4025077-1	92392	PLATE, INSPECTION	EA	1
73	2	KFFZZ	5330-00-111-0739	4026548-0	92392	GASKET, PLATE (PART OF KIT, NSN 2815-00-135-8922)	EA	1
73	3	PAHZZ	5305-00-269-3212	MS90725-61	96906	SCREW, CAP, HEXAGON HEAD: TIMING GEAR HOUSING	EA	3
73	4	PAHZZ	5310-00-261-7340	904206-0	92392	WASHER, LOCK: TIMING GEAR HOUSING, FRONT PLATE, FUEL PUMP COVER, AND PUMP COVER	EA	14
73	5	PAHZZ	5310-00-080-6004	MS27183-14	96906	WASHER, FLAT: TIMING GEAR HOUSING	EA	9
73	6	PAHZZ		4026582-9	92392	HOUSING, TIMING GEAR	EA	1

(1) ILLUSTRATION (a) FIG NO.	(b) ITEM NO.	(2) SMR CODE	(3) FEDERAL STOCK NUMBER	(4) PART NUMBER	(5) FSCM	(6) DESCRIPTION USABLE ON CODE	(7) U/M	(8) QTY INC IN UNIT
73	7	KFFZZ		4025074-8	92392	GASKET: HOUSING (PART OF KIT, FSN 2815-135-8922)	EA	1
73	8	PAHZZ	2815-231-6272	4027303-9	92392	PLATE, FRONT	EA	1
73	9	PAHZZ	5307-400-8670	4026460-8	92392	STUD, PLAIN	EA	5
73	10	XAHZZ		4026483-0	92392	PLATE	EA	1
73	11	PAHZZ	5305-269-3211	916271-0	92392	SCREW, CAP, HEXAGON HEAD: TIMING GEAR HOUSING, FRONT PLATE, AND PUMP COVER	EA	9
73	12	KFFZZ		4025343-7	92392	GASKET: COVER (PART OF KIT, FSN 2815-135-8922)	EA	1
73	13	XBHZZ		4026480-6	92392	COVER: HYDRAULIC PUMP	EA	1
73	14	KFFZZ	5330-936-5239	4025072-2	92392	GASKET: PLATE (PART OF KIT, FSN 2815-135-8922)	EA	1
73	15	PAHZZ	5305-269-2809	MS90726-66	96906	SCREW, CAP, HEXAGON HEAD: FUEL PUMP COVER	EA	2
73	16	PAHZZ	5310-080-6004	MS27183-14	96906	WASHER, LOCK: FUEL PUMP COVER	EA	2
73	17	PAHZZ	5306-439-4999	4254905-5	92392	BOLT, SELF-LOCKING: FRONT PLATE	EA	3
73	18	PAHZZ	5305-269-3222	919015-8	92392	SCREW, CAP, HEXAGON HEAD: TIMING GEAR HOUSING	EA	2
73	19	PAHZZ		121932	00000	NUT, PLAIN, HEXAGON: FUEL PUMP COVER	EA	4
73	20	PAHZZ	5305-550-1311	MS35294-64	96906	SCREW, CAP, HEXAGON HEAD: TIMING GEAR HOUSING	EA	1
73	21	PCHZZ	2815-953-2028	4027416-9	92392	SEAL, OIL: FRONT	EA	1
73	22	KFFZZ		4026549-8	92392	GASKET: COVER PLATE (PART OF KIT, FSN 2815-135-8922)	EA	1
73	23	XBHZZ		4025079-7	92392	COVER, PUMP	EA	1
73	24	PAFZZ	5306-145-0876	220708	00000	SCREW, CAP, HEXAGON: INSPECTION PLATE	EA	6
73	25	PAHZZ	5305-550-1312	912069-2	92392	SCREW, CAP, HEXAGON HEAD: TIMING GEAR HOUSING	EA	4
73		PAHZZ	5330-202-3848	4254873-5	92392	WASHER, SEALING: PLATE LOCKING SCREW	EA	1
74	1	PAHZZ		MS35303-121	96906	SCREW, CAP, HEXAGON HEAD: IDLER GEAR	EA	1
74	2	PAHZZ	5310-249-5268	4025461-7	92392	WASHER, FLAT: IDLER GEAR	EA	1
74	3	PAHZZ	2815-930-9319	4025082-1	92392	BEARING ASSEMBLY: IDLER GEAR	EA	1
74	4	PAHZZ	2815-930-9318	4026039-0	92392	GEAR, IDLER	EA	1
74	5	PAHZZ		4020102-2	92392	SHAFT: IDLER GEAR	EA	1
75	1	PAFZZ	2815-133-9983	4025189-4	92392	BRACKET, ROCKER SHAFT	EA	6
75	2	PAHZZ	5310-637-9541	904206-0	92392	WASHER, LOCK: ROCKER SHAFT BRACKET	EA	6
75	3	PAHZZ	5305-206-0007	MS35297-73	96906	SCREW, CAP, HEXAGON HEAD: ROCKER SHAFT BRACKET	EA	6
75	4	PAFZZ	2815-930-5796	4025188-6	92392	ROCKER ARM ASSEMBLY	EA	12
75	5	PAFZZ	5305-076-9769	4513206-5	92392	SCREW, ADJUSTING	EA	12
75	6	PAFZZ	2815-930-9325	4025191-0	92392	SPRING, HELICAL, COMPRESSION: SPACER CENTER	EA	5
75	7	PAFZZ	2815-930-5794	4025173-8	92392	ROD, PUSH, VALVE	EA	12
75	8	PAFZZ	2815-930-9326	4025187-8	92392	SHAFT, ROCKER ARM	EA	1
75	9	PAFZZ	2815-133-9982	4025175-3	92392	TUBE, OIL INLET TO ROCKER SHAFT	EA	1
75	10	PAFZZ	4730-111-2502	4025237-1	92392	ELBOW RESTRICTION	EA	1
75	11	PAFZZ		912064-3	92392	NUT, TUBE COUPLING: INLET TUBE	EA	2
75	12	PAFZZ	4730-701-7737	60X3	79470	SLEEVE, TUBE: INLET TUBE	EA	2
75	13	PAFZZ	4730-851-1940	68X3	79470	ADAPTER, PIPE TO TUBE: INLET TUBE	EA	1
75	14	PAHZZ	2815-930-9327	4026364-2	92392	CAMSHAFT	EA	1
75	15	PAHZZ		4021454-6	92392	PLATE, THRUST: CAMSHAFT	EA	1
75	16	PAHZZ	5306-438-5126	4254864-4	92392	BOLT: THRUST PLATE	EA	3

ILLUSTRATION (a) FIG. NO.	(b) ITEM NO.	SMR CODE	NATIONAL STOCK NUMBER	PART NUMBER	FSCM	DESCRIPTION USABLE ON CODE	U/M	QTY INC IN UNIT
75	17	PAHZZ	2615-00-145-4116	4026365-9	92392	GEAR, CAMSHAFT	EA	1
75	18	PAFZZ	4730-00-287-1766	114798	00000	ELBOW, PIPE TO TUBE: DRAIN TUBE	EA	1
75	19	PAFZZ	4730-00-278-8763	114628	00000	SLEEVE, TUBE: DRAIN TUBE	EA	1
75	20	PAFZZ	4730-00-011-4627	114627	00000	NUT, TUBE COUPLING: DRAIN TUBE	EA	1
75	21	PAFZZ	4710-00-168-1811	4025176-1	92392	TUBE, OIL DRAIN	EA	1
75	22	PAFZZ		4025192-8	92392	PLUG, SHAFT	EA	2
75	23	PAFZZ	5310-00-115-6234	4025194-4	92392	WASHER, SPACING	EA	2
75	24	PAFZZ	5310-00-143-6351	4025193-6	92392	WASHER, SPACING	EA	2
75	25	PAHZZ	2815-00-930-9314	4026699-1	92392	LIFTER, VALVE	EA	12
75	26	PAHZZ	5315-00-012-4553	124553	24617	KEY, WOODRUFF: CAMSHAFT GEAR	EA	1
						GROUP 20 - CYLINDER BLOCK		
76	1	PBHMM	2815-00-401-9269	4026943-3	92392	BLOCK, ENGINE	EA	1
76	2	PAHZZ	4730-00-289-5176	444703	00000	PLUG, PIPE	EA	4
76	3	PAHZZ	4730-00-044-4715	444715	24617	PLUG, PIPE	EA	1
76	4	PAHZZ	4730-00-044-4854	444854	00000	PLUG, PIPE	EA	1
76	5	PAHZZ		137346	24617	PIN, DOWEL: HEAD	EA	2
76	6	PAHZZ		MS35691-1226	96906	NUT, PLAIN, HEXAGON: VALVE	EA	1
76	7	PAHZZ		4025471-6	92392	SPACER, VALVE	EA	1
76	8	PAHZZ	5360-00-598-9900	4500231-8	92392	SPRING, HELICAL, COMPRESSION: REGULATOR VALVE	EA	1
76	9	PAHZZ	2815-00-352-3063	4507374-9	92392	PISTON, VALVE	EA	1
76	10	PAHZZ	2815-00-936-8201	4507673-4	92392	INSERT, VALVE	EA	1
76	11	PAHZZ	4730-00-044-5751	445751	24617	PLUG, PIPE	EA	2
76	12	PAHZZ		141286	00000	PIN, DOWEL	EA	2
76	13	PAOZZ	4820-00-112-0071	145	79470	COCK, DRAIN: ENGINE BLOCK	EA	2
76	14	PAHZZ	2815-00-930-9333	4025025-0	92392	BEARING, CAMSHAFT, REAR	EA	1
76	15	PAOZZ	6680-00-113-0728	4026592-8	92392	GAGE, LIQUID QUANTITY, OIL	EA	1
76	16	PAOZZ	2815-00-110-9599	4026849-2	92392	ADAPTER, GAGE	EA	1
76	17	XBHZZ		4026382-4	92392	PLATE, COVER	EA	1
76	18	PAHZZ	5310-00-261-7340	904206-0	92392	WASHER, LOCK: COVER PLATE AND FILLER ELBOW	EA	4
76	19	PAHZZ	5305-00-269-3210	MS90725-59	96906	SCREW, CAP, HEXAGON HEAD: COVER PLATE	EA	4
76	20	PAOZZ	2815-00-110-9600	4025717-2	92392	PIPE, OIL FILLER	EA	1
76	21	PAOZZ	2940-00-128-1172	4354449-3	92392	CAP, OIL FILLER	EA	1
C 76	22	PAOZZ	5305-00-269-3214	MS90725-64	96906	SCREW, CAP, HEXAGON HEAD	EA	2
76	23	KBFZZ		4025021-9	92392	GASKET: PLATE OIL FILTER AND PLATE (PART OF KIT, NSN 2815-00-135-8922)	EA	2
76	24	XBHZZ		4025245-4	92392	BEARING CAP: INTERMEDIATE AND REAR	EA	5
76	25	XBHZZ	2815-00-190-8943	4025246-2	92392	BEARING CAP: CENTER	EA	1
76	26	PAHZZ	5305-00-248-5969	4025062-3	92392	SCREW, CAP, HEXAGON HEAD: BEARING CAP	EA	14
76	27	XBHZZ	2815-00-190-8920	4025247-0	92392	BEARING CAP: FRONT MAIN	EA	1
76	28	PAHZZ	2815-00-930-9332	4025238-9	92392	BEARING: CAMSHAFT, FRONT AND INTERMEDIATE	EA	5
76	29	PAHZZ	4730-00-263-3123	112715	00000	PLUG, PIPE	EA	2
76	30	PAHZZ		4255490-7	92392	PLUG, PIPE	EA	1
76	31	PAHZZ		4025392-4	92392	PLUG, PIPE: RESTRICTIONS	EA	1

	(1) ILLUSTRATION (a) FIG NO.	(b) ITEM NO.	(2) SMR CODE	(3) FEDERAL STOCK NUMBER	(4) PART NUMBER	(5) FSCM	(6) DESCRIPTION USAPPC ON CODE	(7) U/M
C	76	32	PAHZZ		4254452-8	92392	PLUG: DISTRIBUTOR HOLE	EA
C	76		PAHZZ		4255491-5	92392	PLUG, PIPE	EA
C	76		PAHZZ		4025323-9	92392	PLUG, PIPE: OIL GALLERY	EA
C	76		PAHZZ	2815-134-0001	4510836-2	92392	SCREW, VALVE	EA
							GROUP 21 - FUEL TANK	
C	77	1	PAFZZ	5305-726-2552	MS90727-165	96906	SCREW, CAP, HEXAGON HEAD: TANK MTG, 5/8-18 THD SIZE	EA
C	77	2	PAFZZ	5310-809-8519	MS27183-22	96906	WASHER, FLAT: TANK MTG, 5/8 IN. ID	EA
C	77	3	PAOZZ	5310-378-0833	32254	23382	NUT, PLAIN, HEXAGON: HOSE CLAMP	EA
C	77	4	PAOZZ	5310-010-3322	904207-8	92392	WASHER, LOCK: HOSE CLAMP, 7/16 IN. ID	EA
C	77	5	PCOZZ	4720-110-3665	3052029-0	92392	HOSE ASSEMBLY: INJECTOR PUMP TO TANK	EA
C	77	6	XBOZZ		3006816-7	92392	CLAMP: LOOP, FUEL HOSE	EA
C	77	7	PAOZZ	5305-069-5571	MS35297-83	96906	SCREW, CAP, HEXAGON HEAD: HOSE CLAMP, 7/16-14 THD SIZE, 3/4 IN. LG	EA
C	77	8	PAFZZ	2910-133-9880	3051105-9	92392	TANK ASSEMBLY, FUEL	EA
C	77	9	PAOZZ	5305-598-4901	MS35301-62	96906	SCREW, CAP, HEXAGON HEAD: SUPPORT BRACKET	EA
C	77	10	PAOZZ	5310-080-6004	MS15795-14	96906	WASHER, FLAT: SUPPORT BRACKET, 3/8 IN. ID	EA
C	77	11	XBOZZ		3050979-8	92392	BRACKET, SUPPORT, FILL AND GAGE TUBE	EA
C	77	12	PAOZZ	5310-637-9541	904206-0	92392	WASHER, LOCK: SUPPORT BRACKET, 3/8 IN. ID	EA
C	77	13	PAOZZ	5310-012-0377	MS35690-605	96906	NUT, PLAIN, HEXAGON: SUPPORT BRACKET, 3/8-16 THD SIZE	EA
C	77	14	PAOZZ	4710-115-0490	3051103-4	92392	TUBE, FUEL GAGE	EA
C	77	15	PAOZZ	6680-465-1574	3051094-5	92392	GAGE: FUEL LEVEL	EA
C	77	16	XBOZZ	2910-166-4302	3050983-0	92392	NECK ASSEMBLY, FUEL TANK FILLER	EA
C	77	17	PAOZZ	2910-111-5191	3051868-2	92392	CAP: TANK FILL	EA
C	77	18	PAOZZ		910160-1	92392	SCREW, MACHINE: FUEL TANK CHAIN	EA
C	77	19	XBOZZ		3054135-3	92392	STRAINER, FUEL	EA
C	77	20	XBOZZ		3051869-0	92392	CHAIN: FILL CAP	EA
C	77	21	PCOZZ	4720-110-1943	3028393-1	92392	HOSE, FILLER TUBE TO TANK	EA
C	77	22	PAOZZ	4730-982-9585	921915-5	90940	CLAMP, HOSE: FILLER TUBE HOSE	EA
C	77	23	PCOZZ	4720-115-0229	3044937-5	92392	HOSE, TUBE TO TANK	EA
C	77	24	PAOZZ	4730-845-5449	36P	66295	CLAMP, HOSE: LEVEL GAGE TUBE	EA
C	77	25	PAOZZ	4710-115-0489	3051039-0	92392	TUBE ASSEMBLY, TANK TO VALVE	EA
C	77	26	PAOZZ	4820-174-0325	40E	30327	VALVE, SHUTOFF	EA
C	77	27	PAOZZ	4730-111-2508	3010159-6	92392	PLUG ASSEMBLY, DRAIN	EA
C	77	28	PAOZZ	5330-883-8221	2155	79150	GASKET: DRAIN PLUG	EA
C	77	29	PAOZZ	4820-849-1220	140	79470	COCK, DRAIN: FUEL TANK	EA
C	77	30	PAOZZ	4730-138-1889	925011-9	92392	ELBOW, PIPE TO HOSE: TANK TO FUEL LINE	EA
C	77	31	PCOZZ	5330-804-5695	MS28778-6	96906	PACKING, PREFORMED: FUEL LINE ELBOW	EA
C	77	32	PAFZZ	5310-982-6809	MS21044LN10	96906	NUT, SELF-LOCKING, HEXAGON: TANK MTG, 5/8-18 THD SIZE	EA
							GROUP 22 - THROTTLE CONTROL	
C	78	1	PAOZZ	5310-012-0377	MS35690-605	96906	NUT, PLAIN, HEXAGON: PEDAL STOP	EA
C	78	2	PAOZZ	5305-846-5703	MS90728-70	96906	SCREW, CAP, HEXAGON HEAD: PEDAL STOP	EA
C	78	3	XBOZZ		3051793-2	92392	PEDAL CONTROL	EA

(1) ILLUSTRATION (a) FIG NO	(b) ITEM NO	(2) SMR CODE	(3) NATIONAL STOCK NUMBER	(4) PART NUMBER	(5) FSCM	(6) DESCRIPTION USABLE ON CODE	(7) U/M	(8) QTY INC IN UNIT
78	4	PAOZZ	5315-00-236-8353	MS24665-306	96906	PIN, COTTER: PIVOT PIN	EA	1
78	5	PAOZZ		3048332-6	92392	PIN, PIVOT: PEDAL	EA	1
78	6	PAOZZ	3920-00-969-5543	R107	78643	BALL JOINT: CONTROL ROD	EA	4
78	7	XBOZZ		3050420-3	92392	ROD, CONTROL FRONT	EA	1
78	8	PAOZZ	5310-00-971-7989	MS35691-5	96906	NUT, PLAIN HEXAGON	EA	4
78	9	XBOZZ		3043391-6	92392	LEVER, CONTROL	EA	1
78	10	PAOZZ	5310-00-010-3322	904207-8	92392	WASHER, LOCK: ROD BEARING	EA	4
78	11	PAOZZ	5310-00-835-2036	MS35691-725	96906	NUT, PLAIN, HEXAGON: ROD BEARING	EA	4
78	12	XBOZZ	2910-00-425-0419	3045896-2	92392	ROD, CONTROL REAR	EA	1
78	13	XBOZZ		3018302-4	92392	CLAMP, LOOP: REAR CONTROL ROD	EA	1
78	14	PAOZZ	3120-00-229-0327	FRE7	57448	BEARING: ROD END	EA	2
78	15	PAOZZ	5360-00-841-2267	3014236-9	92392	SPRING, HELICAL, EXTERIOR, PEDAL RETURN	EA	1
78		XBOZZ		3050228-0	92392	BRACKET: ACCELERATOR MTG	EA	1
						GROUP 23 - INSTRUMENT PANEL, GAGES LIGHTS AND SWITCHES		
79	1	PAOZZ	6210-00-490-1155	M13542	74400	LAMP, UNIT, DASH	EA	2
79	2	XAOZZ	5340-00-955-0319	EX2689	74400	RING, LOCK	EA	1
79	3	XAOZZ		EX2687	74400	COVER	EA	1
79	4	XAOZZ		EX2691	92392	GASEKT	EA	1
79	5	XAOZZ		EX2685	92392	LENS	EA	1
79	6	PAOZZ	6240-00-019-3093	074452	92392	LAMP, INCANDESCENT	EA	1
79	7	XAOZZ		M13542-1	74400	BASE ASSEMBLY, WITH WIRE	EA	1
79	8	PAOZZ	6210-00-800-4776	103-3502-1331-40	72619	LAMP, INDICATOR	EA	2
79	9	PAOZZ	6240-00-553-1038	6S6DC-244	08108	LAMP, INCANDESCENT	EA	2
79	10	PAOZZ		701X3	79470	ELBOW PIPE: TUBE TO GAGE	EA	2
79	11	XBOZZ		3048711-0	92392	TUBE: TOP PRESSURE GAGE	EA	2
79	12	PAOZZ	5925-00-283-6511	PDA25	82647	CIRCUIT BREAKER	EA	1
79	13	PAOZZ	5310-00-010-3319	904204-5	92392	WASHER, LOCK: CIRCUIT BREAKER AND BUZZER MTG	EA	4
79	14	PAOZZ	5310-00-012-1902	121902	00000	NUT, PLAIN, HEXAGON: CIRCUIT BREAKER AND BUZZER MTG	EA	4
79	15	PAOZZ	6350-00-899-4527	1116998	16764	BUZZER: AIR PRESSURE AND TRANSMISSION OIL TEMPERATURE	EA	2
79		XBOZZ		1915309	16764	CLIP	EA	2
79		PAOZZ	5305-00-889-3002	453418	16764	SCREW	EA	2
79	16	PAOZZ	5930-00-699-9438	3029296-5	92392	SWITCH, IGNITION	EA	1
79	17	XAOZZ		3029297-3	92392	LEVER, SWITCH	EA	1
79	18	PAOZZ	5930-00-296-6318	MS39061-1	96906	SWITCH, TOGGLE: LIGHTS	EA	2
79	19	PAOZZ	5925-00-111-5063	PDA6	73803	CIRCUIT BREAKER	EA	1
79	20	PAOZZ	2590-00-307-8856	MS61113-1	96906	SWITCH, LIGHTS	EA	
79	21	XBOZZ		3048713	92392	TUBE: OIL PRESSURE	EA	
79	22	XBOZZ		3052177-7	92392	PANEL, INSTRUMENT	EA	
79	23	PAOZZ		923683-7	92392	SCREW, SELF-TAPPING: PANEL MTG	EA	
79	24	PAOZZ	6685-00-453-9013	346DT101	57733	INDICATOR, TEMPERATURE, TRANSMISSION	EA	
79	25	PAOZZ	6620-00-869-7247	3053222-0	92392	INDICATOR, PRESSURE, OIL	EA	
79	26	PAOZZ		925329-5	92392	SCREW, MACHINE: LIGHT SWITCH MTG	EA	

(1) TRATION (b) ITEM NO.	(2) SMR CODE	(3) NATIONAL STOCK NUMBER	(4) PART NUMBER	(5) FSCM	(6) DESCRIPTION USABLE ON CODE	(7) U/M	(8) QTY INC IN UNIT
27	PAOZZ		917441-8	92392	SCREW, MACHINE: CIRCUIT BREAKER MTG	EA	8
28	PAOZZ	5305-00-068-0506	MS90726-6	SCREW	CAP, HEXAGON HEAD: BUZZER MTG	EA	4
29	PAOZZ	6685-00-133-7521	346DS137	57733	INDICATOR, TEMPERATURE, WATER	EA	1
30	PAOZZ		360FK	57733	INDICATOR, PRESSURE	EA	1
31	PAOZZ	6685-00-133-7522	342EB	57733	INDICATOR, PRESSURE, AIR	EA	1
32	PAOZZ	6625-00-168-0488	3048619-5	92392	AMMETER	EA	1
33	PAOZZ		917443-4	92392	SCREW, MACHINE: CIRCUIT BREAKER MTG	EA	4
34	PAOZZ	2924-00-132-8283	1996941	16764	SWITCH, PUSH, HORN	EA	1
1	PAOZZ	2815-00-786-1564	M1509	74400	PLATE, MOUNTING: TIME METER	EA	1
2	PAOZZ	6645-00-089-8842	15001-2	74400	METER, TIME TOTALIZING	EA	1
3	PAOZZ		903752-4	92392	SCREW, MACHINE: TIME METER MTG	EA	3
1	PAOZZ	5930-00-688-9882	7771274-1	00000	SWITCH ASSEMBLY, THERMOSTAT	EA	1
2	PAOZZ	5930-00-485-9000	1996005	16764	SWITCH, PUSH, STARTING	EA	1
3	XBOZZ		3050345-2	92392	BRACKET: STARTING SWITCH	EA	1
4	PAOZZ	5310-00-012-1902	121902	00000	NUT, PLAIN, HEXAGON: STARTER SWITCH AND SOLENOID	EA	6
5	PAOZZ	5310-00-010-3319	904204-5	92392	WASHER, LOCK: STARTING SWITCH AND SOLENOID	EA	6
6	XBOZZ		3050321-3	92392	BOLT, U: STARTING SWITCH	EA	2
7	PAOZZ	5305-00-068-0506	MS90726-6	96906	SCREW, CAP, HEXAGON HEAD: STARTER SOLENOID	EA	2
8	PAOZZ	5310-00-809-4058	MS27183-10	96906	WASHER, FLAT: STARTER SOLENOID	EA	2
9	PAOZZ	2920-00-735-9542	001484	16764	RELAY, SOLENOID	EA	1
10	PAOZZ		924645-5	92392	NIPPLE, PIPE: PRESSURE SWITCH	EA	1
11	PAOZZ		0920168	92392	TEE, PIPE, PRESSURE SWITCH	EA	1
12	PAOZZ	5930-00-501-1707	M1672	74400	SWITCH, PRESSURE	EA	1
13	PAOZZ	4730-00-072-4877	681X3	79470	CONNECTOR, PRESSURE, OIL	EA	2
14	PAOZZ	5350-00-269-3209	MS90725-58	96906	SCREW, CAP, HEXAGON HEAD: SOLENOID BAR	EA	2
15	PAOOZ	5310-0-637-9541	904206-0	92392	WASHER, LOCK: SOLENOID BAR	EA	2
16	PAOZZ		3050974-9	92392	BAR, MOUNTING, SOLENOID	EA	1
1	PAOZZ		213741	00000	SCREW, CAP, HEXAGON HEAD: PLATE MTG	EA	2
2	PAOZZ	5305-00-068-0498	MS90725-1	96906	SCREW, CAP, HEXAGON HEAD: RELAY MTG	EA	2
3	XBOZZ		3052103-3	92392	PLATE: RELAY MTG	EA	1
4	PAOZZ	2590-00-231-6543	3052094-4	92392	RELAY ASSEMBLY	EA	1
5	PAOZZ	5310-00-637-9541	904206-0	92392	WASHER, LOCK: RELAY AND PLATE MTG	EA	4
6	PAOZZ	5310-00-010-9084	109084	00000	NUT, PLAIN, HEXAGON: RELAY AND PLATE MTG	EA	4
7	PAOZZ	5925-00-520-4666	PDLA45	73803	CIRCUIT BREAKER: 45 AMP	EA	1
8	PAOZZ	5305-00-071-2242	MS90725-9	96906	SCREW, CAP, HEXAGON HEAD: SLAVE RECEPTACLE MTG	EA	4
9	PAOZZ	5935-00-814-7432	MS75058-1	96906	RECEPTACLE ASSEMBLY, SLAVE	EA	1
10	PAOZZ	5310-00-010-3319	904204-5	92392	WASHER, LOCK: SLAVE RECEPTACLE MTG	EA	4
11	PAOZZ	5310-00-010-9084	109084	00000	NUT, PLAIN, HEXAGON: SLAVE RECEPRACLE MTG	EA	4
12	PAOZZ	5945-00-409-3883	70844810801	80211	RELAY, ARMATURE (REVERSE POLARITY PROTECTOR)	EA	1
13	PAOZZ	5905-00-134-9821	17C4455SA07	94990	RESISTOR	EA	1
	XBOZZ		TC171	75272	CLAMP, LOOP: WIRING	EA	4
	XBOZZ		3044015-0	92392	CLAMP: WIRING	EA	4
	XBOZZ		B2	06229	CLAMP: WIRING	EA	1

(1) ILLUSTRATION (a) FIG NO.	(b) ITEM NO.	(2) SMR CODE	(3) FEDERAL STOCK NUMBER	(4) PART NUMBER	(5) FSCM	(6) DESCRIPTION USABLE ON CODE	(7) U/M	(8) QTY INC IN UNIT
		XB0ZZ	5340-592-7996	N7	06229	CLAMP: WIRING	EA	1
		XB0ZZ		TC110	75272	CLAMP, LOOP: WIRING	EA	2
		XB0ZZ		3052077-9	92392	WIRE ASSEMBLY: CIRCUIT BREAKER TO AMMETER	EA	1
		XB0ZZ		3052093-6	92392	WIRE ASSEMBLY: LEFT SIDE OF INSTRUMENT PANEL	EA	1
		PA0ZZ	5935-771-6884	7716884	19207	CONNECTOR, PLUG, ELECTRICAL	EA	1
		PC0ZZ	5365-772-2323	7722323	19207	GROMMET	EA	1
		PA0ZZ	5935-333-9414	7723308	00000	NUT, RETAINING	EA	1
		XBFZZ		3052149-6	92392	WIRING HARNESS: HEAD LIGHT	EA	1
		PA0ZZ	5935-686-2600	8724245	19207	CONNECTOR, PLUG, ELECTRICAL	EA	1
		PC0ZZ	5340-772-2323	7722323	00000	GROMMET	EA	1
		PA0ZZ	5935-333-9414	7723308	00000	NUT, RETAINING	EA	1
		XB0ZZ	5935-686-2599	874258	19207	CONNECTOR, RECEPTACLE, ELECTRICAL	EA	1
		XB0ZZ	5975-771-6634	7716634	19207	COUPLING	EA	1
		PC0ZZ	5340-090-5426	7722333	00000	GROMMET	EA	1
		PA0ZZ	5935-772-3309	7723309	00000	NUT, RETAINING	EA	1
		XB0ZZ	5935-811-0942	8724246	19207	CONNECTOR, PLUG, ELECTRICAL	EA	1
		PA0ZZ	5310-655-9860	8701325	19207	NUT, SLEEVE	EA	1
		XB0ZZ		3052306-2	92392	WIRE: STARTER GROUND	EA	1
		XB0ZZ		3052309-6	92392	WIRE: CIRCUIT BREAKER TO AMMETER	EA	1
		XB0ZZ		3052042-3	92392	WIRE ASSEMBLY, GROUND	EA	1
		XB0ZZ		3052041-5	92392	WIRING HARNESS ASSEMBLY: CIRCUIT BREAKER TO IGNITION SWITCH	EA	2
		XB0ZZ		3052076-1	92392	WIRE: RIGHT SIDE OF INSTRUMENT PANEL	EA	1
		XB0ZZ		3052026-4	92392	WIRE: CIRCUIT BREAKER TO STARTER SOLENOID	EA	1
		XB0ZZ		3052127-2	92392	WIRE, SOLENOID TO END	EA	1
		XB0ZZ		3052078-7	92392	WIRE ASSEMBLY: STARTING SOLENOID TO STARTER SOLENOID	EA	1
		XB0ZZ		3052079-5	92392	WIRE, SOLENOID TO STARTER	EA	1
		XB0ZZ		3052160-3	92392	WIRE CABLE	EA	1
		XB0ZZ		3052167-8	92392	WIRE: FUEL INJECTION PUMP SHUTOFF	EA	1
		XB0ZZ		3052110-8	92392	WIRING HARNESS	EA	1
		XB0ZZ		3052298-1	92392	WIRE: LEFT WARNING LITE TO BUZZER	EA	1
						GROUP 24 - AIR COMPRESSOR		
83	1	PA0ZZ		4040351-1	92392	NUT, PULLEY: 3/4 IN. ID, 16 THD SIZE	EA	1
83	2	PA0ZZ	5315-012-0123	MS24665-355	96906	PIN, COTTER: PULLEY NUT, 1/8 IN. DIA, 1 1/4 IN. LG	EA	1
83	3	PA0ZZ	3020-114-0988	4025652-1	92392	PULLEY, HALF	EA	1
83	4	PC0ZZ	3030-920-6711	4027245-2	92392	BELT, DRIVE	EA	1
83	5	PA0ZZ	3020-114-0989	4025653-9	92392	PULLEY, HALF	EA	1
83	6	PA0ZZ		102593	00000	SETSCREW: PULLEY MTG, 3/8-16 X 1/2 IN. LG	EA	3
83	7	PA0ZZ		HP808	06631	KEY, WOODRUFF: PULLEY MTG, 1/4 X 1 IN.	EA	1
83	8	XB0ZZ		921727-4	92392	ADAPTER, PIPE TO HOSE: WATER PUMP TO COMPRESSOR	EA	1
83	9	PA0ZZ	4730-289-5895	AN737PW46	88044	CLAMP, HOSE: COMPRESSOR HOSES	EA	4
83	10	MO0ZZ				HOSE, WATER OUTLET, COMPRESSOR MANUFACTURE FROM:	EA	1
83		PC0ZZ	4720-541-8859			HOSE, AS REQUIRED	FT	

	(1) ILLUSTRATION (a) FIG NO.	(b) ITEM NO.	(2) SMR CODE	(3) FEDERAL STOCK NUMBER	(4) PART NUMBER	(5) FSCM	(6) DESCRIPTION USABLE ON CODE	(7) U/M	QTY INC IN UNIT
C	83	11	PAOZZ		4255286-9	92392	ELBOW, PIPE TO HOSE: COMPRESSOR LINES	EA	3
C	83	12	PAOZZ		140039	24617	BUSHING, REDUCER: ELBOW TO THERMOSTAT HOUSING, 1/2 X 3/8 IN.	EA	1
C	83	13	MOOZZ				HOSE, WATER INLET, COMPRESSOR MANUFACTURE FROM:	EA	1
C	83		PCOZZ	4720-541-8859			HOSE, AS REQUIRED	FT	
C	83	14	XBOZZ		4716090-8	92392	CLAMP, LOOP: OIL LINE	EA	1
C	83	15	XBOZZ		4025634-9	92392	CLAMP, LOOP, ANGLE: OIL LINE	EA	1
C	83	16	PAOZZ	4730-585-7303	61FL1-4	30327	NUT, TUBE: OIL TUBE	EA	2
C	83	17	PAOZZ	4730-496-7337	68FL1-4X1-8	30327	ADAPTER, PIPE TO TUBE: OIL TUBE	EA	1
C	83	18	PAOZZ	4730-430-4390	69FL1-4X1-8	30327	ELBOW, PIPE TO TUBE: OIL LINE	EA	1
C	83	19	XBOZZ		4025507-7	92392	TUBE ASSEMBLY, OIL COMPRESSOR TO CRANKCASE	EA	1
C	83	20	PAOZZ	5340-215-7421	60FL1-4	30327	SLEEVE, COMPRESSION: OIL RUBBER LINE	EA	2
C	83	21	XBOZZ	4730-639-9730	915399-0	92392	ELBOW, PIPE TO TUBE: OIL LINE	EA	1
C	83	22	PCOZZ	5330-402-5849	4059709-8	92392	GASKET, AIR INLET, ADAPTER	EA	1
C	83	23	XBOZZ		4059708-0	92392	ELBOW, AIR INLET	EA	1
C	83	24	XBOZZ		681X3	79470	ADAPTER, PIPE TO TUBE: COMPRESSOR TO TUBE	EA	2
C	83	25	PAOZZ	4710-115-0503	3051025-9	92392	TUBE: TO COMPRESSOR	EA	1
C	83	26	PAOZZ	4730-702-2750	MS35842-3	96906	CLAMP, HOSE: AIR INLET	EA	4
C	83	27	MOOZZ		16R2X	02231	HOSE, AIR INLET TUBE MANUFACTURE FROM:	EA	2
C	83		PCOZZ	2940-603-4555			HOSE	FT	
C	83	28	XBOZZ		4027197-5	92392	TUBE, AIR INLET COMPRESSOR	EA	1
C	83	29	PAOZZ	5306-225-8504	MS90725-40	96906	SCREW, CAP, HEXAGON HEAD: INLET ELBOW MTG, 5/16-18 THD SIZE, 2 IN. LG	EA	2
C	83	30	PAOZZ		917330-3	92392	WASHER, FLAT: INLET ELBOW MTG, 1 1/32 IN. ID, COPPER	EA	2
C	83	31	PAOZZ	4730-088-8833	69FL	30327	ELBOW, PIPE TO TUBE: COMPRESSOR TO LINE	EA	1
C	83	32	PAOZZ		68X8A8X8	79470	CONNECTOR: ELBOW TO TUBE	EA	1
C	83	33	PAOZZ	5310-010-3320	MS35338-7	96906	WASHER, LOCK: ADAPTER MTG, 5/16 IN. ID	EA	2
C	83	34	PAOZZ	5306-225-8498	MS90725-33	96906	SCREW, CAP, HEXAGON HEAD: ADAPTER MTG, 5/16-18 THD SIZE, 7/8 IN. LG	EA	2
C	83	35	PAOZZ		3029930-9	92392	ADAPTER: HEAD TO LINE	EA	1
C	83	36	PCFZZ	5330-115-1510	4040305-7	92392	GASKET, COMPRESSOR	EA	1
C	83	37	PAFZZ	5310-010-3322	MS35338-9	96906	WASHER, LOCK: BRACKET MTG, 7/16 IN. ID	EA	6
C	83	38	PAFZZ	5305-069-5574	MS90725-86	96906	SCREW, CAP, HEXAGON HEAD: BRACKET MTG, 7/16-14 THD SIZE, 1 1/4 IN. LG	EA	6
C	83	39	XBFZZ		4025979-8	92392	BRACKET: COMPRESSOR MTG	EA	1
C	83	40	PAFZZ	5305-042-9478	MS90725-90	96906	SCREW, CAP, HEXAGON HEAD: COMPRESSOR MTG, 7/16-14 THD SIZE, 1 3/4 IN. LG	EA	4
C	83	41	PCFZZ	5330-115-1509	4025622-4	92392	GASKET, BRACKET (PART OF KIT, FSN 2815-135-8922)	EA	1
C	83	42	PAOZZ	4730-.92-9450	WWN351TYPE1	81348	NIPPLE, PIPE: HOSE TO GOVERNOR, 1/4 IN. NPT, 7/8 IN. LG	EA	1
C	83	43	PAOZZ		105417	00000	TEE, PIPE: TO GOVERNOR, 1/4 IN. NPT	EA	1
C	83	44	PAOZZ	4730-391-3771	48X4A	79470	ELBOW, PIPE TO TUBE: AIR LINE TO TEE	EA	2
C	83	45	PAOZZ		3053228-7	92392	ELBOW, PIPE TO TUBE: AIR LINE TO GOVERNOR	EA	2
C	83	46	PAOZZ		3053227-1	92392	TUBE: AIR LINE TO GOVERNOR	EA	1
C	83	47	XBOZZ		3037002-7	92392	CLAMP, LOOP: AIR LINE	EA	1
C	83	48	PAFZZ	5310-010-3322	MS35338-9	96906	WASHER, LOCK: COMPRESSOR MTG, 7/16 IN. ID	EA	4
C	83	49	PAFZZ		MS35690-7055	96906	NUT, PLAIN, HEXAGON: COMPRESSOR MTG, 7/16-14 THD SIZE	EA	4
C	83	50	PAFFF	4310-010-0207	4027233-8	92392	COMPRESSOR ASSEMBLY, AIR	EA	1

ILLUSTRATION (a) FIG NO.	(b) ITEM NO.	SMR CODE	FEDERAL STOCK NUMBER	PART NUMBER	FSCM	DESCRIPTION USABLE ON CODE	U/M	QTY INC IN UNIT
C 84	1	XBFZZ		4040523-5	92392	NUT: DISCHARGE VALVE CAP	EA	2
C 84	2	PAFZZ		210468	06853	SPRING, HELICAL, COMPRESSION: VALVE	EA	2
C 84	3	PAFZZ	4820-115-0252	4040522-7	92392	VALVE, DISCHARGE	EA	2
C 84	4	PAFZZ	5306-712-3285	202979	06853	SCREW, CAP, HEXAGON HEAD: COVER MTG	EA	8
C 84	5	PAFZZ		226316	06853	COVER ASSEMBLY, CYLINDER HEAD	EA	1
C 84	6	PCOZZ	5330-291-8977	204820	06853	GASKET: FITTING	EA	1
C 84	7	PCFZZ	5330-693-1940	4049264-7	92392	GASKET: CYLINDER HEAD	EA	1
C 84	8	PAFZZ	5340-115-1427	4049256-3	92392	SEAT, VALVE	EA	2
C 84	9	PAFZZ	4730-042-6318	444697	00000	PLUG, PIPE: CYLINDER HEAD, 3/8 IN. HEXAGON SOCKET HEAD	EA	3
C 85	1	XAFFF		4053195-6	92392	BLOCK ASSEMBLY	EA	1
C 85	2	PAFZZ	5305-269-3210	MS90725-59	96906	SCREW, CAP, HEXAGON HEAD: CRANKCASE MTG	EA	6
C 85	3	PAFZZ	5310-637-9541	MS35338-8	96906	WASHER, LOCK: CRANKCASE MTG	EA	6
C 85	4	PAFZZ	4730-042-6318	444697	00000	PLUG, PIPE: CRANKCASE	EA	3
C 85	5	PAFZZ	5360-200-4885	236126	06853	SPRING, VALVE	EA	1
C 85	6	PAFZZ	2530-869-7355	239395	06853	GUIDE, VALVE	EA	1
C 85	7	PAFZZ	2530-592-3899	255605	06853	VALVE, INLET	EA	1
C 85	8	PAFZZ	3120-115-1394	4054439-7	92392	BUSHING, VALVE	EA	2
C 85	9	PAFZZ	2530-509-9789	236118	06853	SEAT, INLET VALVE	EA	2
C 85	10	PAFZZ		4058898-0	92392	VALVE ASSEMBLY, UNLOADER	EA	2
C 85	11	PAFZZ	4730-187-4207	901652-8	92392	PLUG, PIPE: BLOCK	EA	1
C 85	12	PAOZZ		4053235-0	92392	COCK, DRAIN	EA	1
C 85	13	PAFZZ	4310-294-1311	225514	06853	RING, SET, PISTON	EA	1
C 85	14	PAFZZ	2530-701-3565	227252	06853	PISTON ASSEMBLY	EA	2
C 85	15	XAFZZ		4049261-3	92392	PIN, PISTON	EA	2
C 85	16	PAFFF		228195	06853	ROD ASSEMBLY, CONNECTING	EA	2
C 85	17	PAFZZ	3120-115-1395	239541	06853	BUSHING, ROD: PISTON PIN	EA	2
C 85	18	PAFZZ	5306-834-8450	238598	06853	BOLT: CONNECTING ROD	EA	4
C 85	19	PAFZZ	5310-792-9785	238597	06853	WASHER, LOCK: CONNECTING ROD	EA	4
C 85	20	PCFZZ	5330-980-9007	202898	06853	GASKET: BLOCK	EA	1
C 85	21	PAFZZ	4310-085-1905	238610	06853	BEARING, ROD	EA	4
C 85	22	XBFZZ		4040340-4	92392	WIRE, LOCKING: PISTON PIN	EA	2
C 86	1	PCFZZ	5330-286-7121	212735	06853	SEAL: CRANKSHAFT	EA	1
C 86	2	XBFZZ		4040515-1	92392	COVER: CRANKSHAFT DRIVE END	EA	1
C 86	3	PCFZZ	5330-215-7348	203052	06853	GASKET: DRIVE END COVER	EA	1
C 86	4	PAFZZ	5330-215-7348	238816	06853	BEARING, BALL: CRANKSHAFT	EA	1
C 86	5	XAFZZ		4056626-7	92392	HOUSING, CRANKSHAFT	EA	1
C 86	6	PAFZZ		230527	06853	CRANKSHAFT	EA	1
C 86	7	PCFZZ	5330-422-7694	210039	06853	PACKING, PREFORMED: COVER	EA	1
C 86	8	PAOZZ	3120-115-1393	4056130-0	92392	WASHER, THRUST: CRANKSHAFT	EA	1
C 86	9	PAFZZ	3120-755-7097	240580	06853	BEARING, COVER	EA	1
C 86	10	XBFZZ		4056129-2	92392	COVER, ASSEMBLY, CRANKSHAFT	EA	1
C 86	11	PAFZZ	5310-010-3320	MS35338-7	96906	WASHER, LOCK: CRANKSHAFT COVER	EA	8
C 86	12	PAFZZ		MS90725-32	96906	SCREW, CAP, HEXAGON HEAD: COVER MTG	EA	4

	ILLUSTRATION (a) FIG NO.	(b) ITEM NO.	SMR CODE	FEDERAL STOCK NUMBER	PART NUMBER	FSCM	DESCRIPTION USABLE ON CODE
C	86	13	PAFZZ		MS90725-32	96906	SCREW, CAP, HEXAGON HEAD: COVER MTG
C	87	1	PAFZZ	5305-225-8507	MS90725-43	96906	SCREW, CAP, HEXAGON HEAD: GOVERNOR MTG, 5/16-18 THD SIZE, 2 3/4 IN. LG
C	87	2	PAFZZ	5310-010-3320	MS35338-7	96906	WASHER, LOCK: GOVERNOR MTG, 5/16 IN. ID
C	87	3	PCOZZ	5330-531-3197	236577	06853	GASKET: GOVERNOR
C	87	4	PAOZZ	3805-134-9346	4389823-8	92392	GOVERNOR ASSEMBLY
C	88	1	XAOZZ		240347-5	06853	COVER, GOVERNOR
C	88	2	XAOZZ	5340-738-7552	240345-9	06853	RING, RETAINING
C	88	3	XAOZZ	5360-225-0706	275202-0	06853	SPRING ASSEMBLY
C	88	4	XAOZZ		240339-2	06853	STEM
C	88	5	XAFZZ	5360-079-1940	240338-4	06853	SPRING, STEM
C	88	6	XAFZZ		240333-5	06853	WASHER, SPRING
C	88	7	XAFZZ		203175-5	06853	PACKING, PREFORMED: SPRING
C	88	8	XAFZZ	5330-225-0707	239658-8	06853	PACKING, PREFORMED: PISTON
C	88	9	XAOZZ	2815-603-1532	275201-2	06853	PISTON ASSEMBLY
C	88	10	XAOZZ	2530-225-0708	240334-3	06853	VALVE
C	88	11	XAOZZ	-225-0709	240336-8	06853	SPRING, PISTON
C	88	12	XAOZZ		275230-1	06853	BODY ASSEMBLY, GOVERNOR
C	88	13	XAOZZ		274070	72582	PLUG, PIPE: BODY
C	88	14	XAOZZ	4730-225-0710	240346-7	06853	FILTER: BODY
							GROUP 25 - STEERING GEAR AND TIE ROD
C	89	1	PAOZZ	2530-960-9337	3040	77915	WHEEL, STEERING
C	89	2	XBOZZ		3048968-6	92392	SPACER, MEDALLION
C	89	3	PCOZZ	5330-115-6171	923582-1	92392	PACKING, PREFORMED: SPACER
C	89	4	XBOZZ	2530-419-8688	3048964-5	92392	MEDALLION, STEERING WHEEL
C	89	5	PAOZZ	5305-855-0959	MS24629-41	96906	SCREW, MACHINE: MEDALLION
C	89	6	XBFZZ		3043222-3	92392	BOLT, U: STEERING GEAR
C	89	7	PAFZZ	5310-209-0693	MS15795-19	96906	WASHER, FLAT: STEERING GEAR
C	89	8	PAFZZ	5310-010-3323	MS35338-10	96906	WASHER, LOCK: STEERING GEAR MTG
C	89	9	PAFZZ	5310-265-9217	MS35690-825	96906	NUT, PLAIN, HEXAGON: STEERING GEAR MTG
B	90		PAFHH	2530-115-0241	7804252	52788	GEAR ASSEMBLY, STEERING
C	90	1	PAFZZ	3110-902-3754	453896	52788	BEARING, NEEDLE
C	90	2	PCFZZ	5330-118-2919	5696071	52788	GASKET: HOUSING ADAPTER
C	90	3	XBFZZ		5687056	52788	ADAPTER ASSEMBLY, HOUSING
C	90	4	PCFZZ		5665836	52788	PACKING, PREFORMED: HOUSING ADAPTER
C	90	5	XBFZZ	5310-932-0848	5665704	52788	WASHER, SEAL
C	90	6	PCFZZ		5663834	52788	SEAL, PLAIN, ENCASED: SHAFT
C	90	7	PAFZZ	3110-227-3505	5663818	52788	BEARING ASSEMBLY, SHAFT
C	90	8	PAFFF	2500-793-2990	5687123	52788	VALVE ASSEMBLY
C	90	9	XAFZZ		5687163	52788	SPOOL: VALVE
C	90	10	XAFZZ		5687139	52788	HOUSING, VALVE
C	90	11	XAFZZ	2530-375-0998	5663828	52788	PLUNGER: VALVE
C	90	12	XAFZZ	5360-834-5512	5680283	52788	SPRING: PLUNGER

	ILLUSTRATION (a) FIG NO.	(b) ITEM NO.	SMR CODE	FEDERAL STOCK NUMBER	PART NUMBER	FSCM	DESCRIPTION USABLE ON CODE	U/M
C	90	13	XAFZZ		5681216	52788	SPRING: VALVE SPOOL	EA
C	90	14	XAFZZ	5310-768-0251	5682242	52788	NUT: VALVE SPOOL ADJUSTER	EA
C	90	15	PCFZZ	2530-917-7590	5692671	52788	SEAL, PLAIN, ENCASED: STEERING SHAFT	EA
C	90	16	PAFZZ	3110-902-3744	5683229	52788	BEARING: COVER	EA
C	90	17	XBFZZ		7803095	52788	COVER ASSEMBLY, SHAFT	EA
C	90	18	PCFZZ	5325-499-8730	187540	52788	GROMMET: COVER	EA
C	90	19	PAFZZ	2530-934-8191	5692276	52788	BEARING ASSEMBLY, SHAFT	EA
C	90	20	PAOZZ	5310-879-6493	265079	52788	WASHER: SHAFT	EA
C	90	21	PAOZZ	5310-656-0227	913177-2	92392	NUT: STEERING WHEEL	EA
C	90	22	XBFZZ		5695797	52788	CABLE ASSEMBLY	EA
C	90	23	PAFZZ	5305-269-3221	MS90725-71	96906	BOLT, MACHINE: COVER MTG	EA
C	90	24	PAFZZ	5310-637-9541	MS35338-46	96906	WASHER, LOCK: COVER MTG	EA
C	90	25	PAFZZ	2530-115-0242	7803097	52788	SHAFT ASSEMBLY, STEERING	EA
C	90	26	PAFZZ	5305-499-9360	187375	52788	SCREW ASSEMBLED WASHER: CLAMP MTG	EA
C	90	27	XAFZZ	5340-737-6869	266506	52788	CLAMP: GUIDE	EA
C	90	28	XAFZZ	2530-523-1797	266505	52788	GUIDE, BALL	EA
C	90	29	XAFZZ	3110-100-6152	266800	52788	BALL, STEERING GEAR	EA
C	90	30	XAFZZ		5695800	52788	SHAFT, STEERING	EA
C	90		XAFZZ	5310-090-0819	267608	52788	NUT	EA
C	90	31	PAOZZ	4730-289-5176	209199	00000	PLUG, PIPE: STEERING GEAR	EA
C	90	32	XAFZZ		5687064	52788	HOUSING ASSEMBLY, GEAR	EA
C	90	33	PAFZZ	3120-661-9867	5662967	52788	BUSHING: PITMAN SHAFT	EA
C	90	34	PCFZZ		5672855	52788	SEAL, PLAIN, ENCASED: PITMAN SHAFT	EA
C	90	35	PAFZZ	5310-754-2009	MS35338-14	96906	WASHER, LOCK: PITMAN SHAFT	EA
C	90	36	PAFZZ	5310-700-0667	258779	52788	NUT, PLAIN, HEXAGON: PITMAN SHAFT	EA
C	90	37	PAFZZ	2530-917-7592	5672852	52788	GEARSHAFT	EA
C	90	38	PAFZZ	5305-164-3573	266678	52788	SCREW, MACHINE: LASH ADJUSTER	EA
C	90		PAFZZ	5365-098-2201	605142	52788	SHIM KIT, LASH ADJUSTER	EA
C	90	39	KBFZZ		266903	52788	SHIM: .063 IN. THK	EA
C	90	39	KBFZZ		266905	52788	SHIM: .065 IN. THK	EA
C	90	39	KBFZZ		266907	52788	SHIM: .067 IN. THK	EA
C	90	39	KBFZZ		266909	52788	SHIM: .069 IN. THK	EA
C	90	40	PAFZZ	3120-737-3552	266034	52788	BUSHING: PITMAN GEAR	EA
C	90	41	PCFZZ	5330-404-8155	737635	19207	GASKET: COVER	EA
C	90	42	XBFZZ		270247	52788	COVER ASSEMBLY, GEAR	EA
C	90	43	PAFZZ	5310-637-9541	MS35338-46	96906	WASHER, LOCK: COVER MTG	EA
C	90	44	PAFZZ	5305-269-3209	MS90725-58	96906	SCREW, CAP, HEXAGON HEAD: COVER MTG	EA
C	90	45	PAFZZ		910876-2	92392	NUT, PLAIN, HEXAGON: LASK ADJUSTING	EA
C	90	46	PAFZZ	5310-010-3322	904207-8	92392	WASHER, LOCK: ADAPTER MTG	EA
C	90	47	PAFZZ	5305-069-5574	MS90725-86	96906	SCREW, CAP, HEXAGON HEAD: ADAPTER MTG	EA
C	91	1	PAOZZ	2530-133-9972	5695788	52788	ARM, STEERING, PITMAN	EA
C	91	2	PAFZZ	5305-543-2865	MS35297-111	96906	SCREW, CAP, HEXAGON HEAD: STEERING GEAR MTG	EA
C	91	3	PAFZZ	5310-010-3323	MS35338-10	96906	WASHER, LOCK: STEERING GEAR MTG	EA

	(1) ILLUSTRATION (a) FIG NO.	(b) ITEM NO.	(2) SMR CODE	(3) FEDERAL STOCK NUMBER	(4) PART NUMBER	(5) FSCM	(6) DESCRIPTION USABLE ON CODE	(7) U/M	(8) QTY INC IN UNIT
C	91	4	PA000	2510-110-9607	6242X	04716	TIE ROD ASSEMBLY	EA	1
C	91	5	PA0ZZ		3133	04716	SEAL: TIE ROD	EA	1
C	91	6	XB0ZZ		6242X1	04716	TIE ROD	EA	1
C	91	7	XA0ZZ		2586-10	04716	NUT, SELF-LOCKING, HEXAGON: TIE ROD	EA	1
C	91	8	PA0ZZ	2530-115-0243	6235X	04716	END ASSEMBLY, ROD	EA	1
C	91	9	PC0ZZ	5330-110-5698	2110-2	04716	SEAL: ROD END	EA	1
C	91	10	PA0ZZ	5310-823-8803	MS15795-20	96906	WASHER, FLAT: TIE ROD, 5/8 IN. ID	EA	2
C	91	11	PA0ZZ	5310-021-8512	218512	00000	NUT, CASTELLATED, HEXAGON: TIE ROD, 5/8-18 THD SIZE	EA	2
C	91	12	PA0ZZ		MS24665-357	96906	PIN, COTTER: TIE ROD END, 1/8 IN. DIA, 1 1/2 IN. LG	EA	2
N	91		PC0ZZ		3051826-0	92392	SEAL: TIE ROD	EA	1
C	91	13	XB0ZZ		3050816-2	92392	BRACKET, TIE ROD	EA	4
C	91	14	PA0ZZ	5310-068-8067	MS17829-8F	96906	NUT, SELF-LOCKING, HEXAGON: TIE ROD BRACKET MTG, 1/2-20 THD SIZE	EA	4
C	91	15	PA0ZZ	5305-725-4187	MS90726-1'4	96906	SCREW, CAP, HEXAGON HEAD: TIE ROD BRACKET MTG, 1/2-20 THD SIZE, 1 3/4 IN. LG	EA	4
							GROUP 26 - STEERING CYLINDER, VALVES AND PUMP		
C	92	1	M0000		3050851-9	92392	HOSE ASSEMBLY: VALVE TO CYLINDER MANUFACTURE FROM:	EA	2
	92		PA0ZZ	4730-913-7406			ELBOW, 2 REQUIRED	EA	
	92		PA0ZZ	3930-060-4219			ELBOW, 2 REQUIRED	EA	
	92		PA0ZZ		900564-43	01276	GUARD, 2 REQUIRED	EA	
	92		PA0ZZ	4720-930-4515			HOSE, 6 FT 6 IN. REQUIRED FOR EACH HOSE	FT	
C	92	2	PA0ZZ	4730-933-0742	923157-2	92392	TEE, PIPE TO TUBE: HOSE TO CYLINDER	EA	2
C	92	3	M0000		3050856-8	92392	HOSE ASSEMBLY, CYLINDER TO CYLINDER MANUFACTURE FROM:	EA	2
C	92		PA0ZZ	4730-952-0038			FITTING, 2 REQUIRED	EA	
C	92		PC0ZZ	4720-930-4509			HOSE, 3 FT 6 IN. REQUIRED FOR EACH HOSE	FT	
C	92	4	PA0ZZ		2062-8-8S	01276	ELBOW, PIPE TO TUBE: STEERING LINE	EA	3
C	92	5	XB0ZZ		3044055-6	92392	CLAMP, LOOP: HYDRAULIC LINE	EA	1
C	92	6	PA0ZZ	5305-269-3209	MS90725-58	96906	SCREW, CAP, HEXAGON HEAD: CLAMP MTG	EA	1
C	92	7	PA0ZZ	5310-637-7541	MS35338-4	96906	WASHER, LOCK: CLAMP MTG	EA	1
C	92	8	XB0ZZ		3011248-6	92392	CLAMP, LOOP: HYDRAULIC HOSE	EA	1
C	92	9	PA0ZZ	4730-853-1182	202702-8-8S	01276	ADAPTER, PIPE TO HOSE: STEERING HOSE	EA	1
C	92	10	PA0ZZ	5315-839-5822	MS24665-353	96906	PIN, COTTER: LOCK PIN, 1/8 IN. DIA, 1 IN. LG	EA	4
C	92	11	XB0ZZ	5315-401-5085	3042706	92392	PIN, CONNECTING: CYLINDER MTG	EA	4
C	92	12	XB0ZZ		3001621	92392	PIN, LOCK: CONNECTING PIN	EA	4
C	92	13	PA0HH	2530-012-2046	3050882-4	92392	CYLINDER ASSEMBLY, POWER STEERING	EA	2
C	93	1	PAHHH	2530-115-0244	3052400-3	92392	HEAD ASSEMBLY, CYLINDER	EA	2
C	93	2	PAHZZ		990208-132-3-5C	45681	SEAL, PLAIN, ENCASED: HEAD (PART OF KIT, FSN 2530-110-9609)	EA	2
C	93	3	KBHZZ		3052477-1	92392	HEAD, CYLINDER	EA	2
C	93	4	KBHZZ		924686-9	92392	PACKING, PREFORMED: HEAD (PART OF KIT, FSN 2530-110-9609)	EA	2
C	93	5	KBHZZ		3047968	92392	BACKUP, RING	EA	2
C	93	6	KBHZZ		25001500-375	86927	PACKING, PREFORMED: PISTON SEAL (PART OF KIT, FSN 2530-110-9609)	EA	2
C	93	7	PAHZZ	2530-115-0256	3052403-8	92392	BEARING, HEAD	EA	2

	(1) ILLUSTRATION (a) FIG NO.	(b) ITEM NO.	(2) SMR CODE	(3) FEDERAL STOCK NUMBER	(4) PART NUMBER	(5) FSCM	(6) DESCRIPTION USABLE ON CODE
C	93	8	PAHZZ	2530-115-0256	3052404-5	79136	RETAINER, BEARING
C	93	9	PAHZZ	2530-115-0245	3050353-6	92392	PISTON, CYLINDER
C	93	10	KBHZZ		3047955-4	92392	PACKING, PREFORMED: PISTON (PART OF KIT, FSN 2530-110-9609)
C	93	11	KBHZZ		3044021-8	92392	RING, PISTON: CENTER (PART OF KIT, FSN 2530-110-9609)
C	93	12	XBHZZ		3047958-8	92392	BOSS, PISTON
C	93	13	XBHZZ		924719-8	92392	NUT, SELF-LOCKING, HEXAGON: PISTON MTG
C	93	14	PAOZZ	4730-172-0034	MS15006-6	96906	FITTING, LUBRICATION: TUBE
C	93	15	XBHZZ		3047987-7	92392	TUBE ASSEMBLY, CYLINDER
C	93	16	PAFZZ	3120-814-8469	AB24-9L	51588	BEARING, SLEEVE
C	93	17	PAFZZ	5365-804-7697	N5000-244	79136	RING, RETAINING: BEARING
C	93	18	PAFZZ	5330-253-8262	17310	80201	SEAL, BEARING
C	93	19	PAHZZ	2530-115-0246	3050881-6	92392	ROD, PISTON
C	93	20	PAHZZ	4730-050-4208	MS15003-1	96906	FITTING, LUBRICATION: CYLINDER ROD
C	94		PAOHH	2530-110-9608	CAT219	02892	PUMP ASSEMBLY, STEERING
C	94	1	PAHZZ	5305-846-5703	MS90728-70	96906	SCREW, CAP, HEXAGON HEAD: PUMP COVER
C	94	2	PAHZZ	5310-637-9541	MS35338-46	96906	WASHER, LOCK: PUMP COVER
C	94	3	PAHZZ		A419X5	02892	WASHER, FLAT: PUMP COVER
C	94	4	XAHZZ		8X17X4	02892	COVER, PUMP
C	94	5	PCHZZ	5330-116-5819	925451-7	92392	SEAL, PUMP
C	94	6	XBHZZ		A554X10	02892	PIN, DOWEL: PUMP HOUSING
C	94	7	XAHZZ		1X1711X1	02892	HOUSING, PUMP
C	94	8	XAHZZ		21X1711X1	02892	SHAFT, DRIVEN
C	94	9	XAHZZ		20X1711X13	02892	SHAFT ASSEMBLY DRIVE
C	94	10	PAHZZ	2530-402-8240	12X17X1	02892	PLATE, WEAR
C	94	11	PCHZZ	5340-116-5823	510145	80201	SEAL, PUMP
C	94	12	PCHZZ	5330-116-5817	A1022X55	02892	SEAL, PUMP
C	94	13	XAHZZ		7X17X15	02892	ADAPTER, PUMP
C	94	14	PAHZZ	5330-116-5813	3050599-8	92392	RETAINER, PACKING
C	94	15	PAHZZ	5330-116-5814	A991X6	02892	RETAINER, PACKING
C	94	16	PCHZZ	5330-452-1340	A1022X23	02892	SEAL, PUMP
C	94	17	PCHZZ	5330-116-5815	A1023X5	02892	SEAL, PUMP
C	94	18	PAHZZ	5305-206-0007	MS35297-72	96906	SCREW, CAP, HEXAGON HEAD: PUMP COVER
C	94		PCHZZ		A908X4	02892	SEAL, PUMP
C	94		PAOZZ	5305-042-6417	MS90725-113	96906	SCREW, CAP, HEXAGON HEAD: PUMP MTG
C	94		PAOZZ	5310-010-3323	MS35338-10	96906	WASHER, LOCK: PUMP MTG
C	93		PCHZZ	2530-110-9609	3050752-9	92392	REPAIR KIT, CYLINDER (CONSISTS OF)
	93	4					1-PACKING
	93	6					1-PACKING
	93	10					2-RING
	93	11					1-RING
	93						1-RING

(1) ILLUSTRATION (a) FIG NO.	(b) ITEM NO.	(2) SMR CODE	(3) NATIONAL STOCK NUMBER	(4) PART NUMBER	(5) FSCM	(6) DESCRIPTION USABLE ON CODE	(7) U/M	(8) QTY INC IN UNIT
						GROUP 27 - PROPELLER SHAFTS		
95		PA000	2520-00-488-8187	956-04-21664	79780	PROPELLER SHAFT, REAR AXLE	EA	1
95	1	PA000	2520-00-133-9963	5NYSM28-98	79780	YOKE ASSEMBLY, SLIP	EA	1
95	2	PA0ZZ		A282706	00000	NUT, PLAIN, ROUND: PACKING RETAINER	EA	1
95	3	PA0ZZ		211-02	79780	WASHER: PACKING RETAINER	EA	1
95	4	PC0ZZ	5330-00-311-5305	2148585	24617	WASHER, FELT: GREASE	EA	1
95	5	PA0ZZ	2520-00-133-9962	50NL528-22	79780	YOKE ASSEMBLY, TUBE	EA	1
95	6	PA000	2520-00-521-6186	CP58N4	79780	CROSS ASSEMBLY, YOKE	EA	2
95	7	PA0ZZ	5306-00-225-9084	MS90726-29	96906	SCREW, CAP, HEXAGON HEAD: CROSS MTG	EA	16
95	8	PA0ZZ		5N9	79780	PLATE, LOCK: CROSS MTG	EA	8
95	9	PA0ZZ		5N81	79780	PLATE, COVER: CROSS	EA	8
95	10	PA0ZZ	4730-00-172-0010	MS15002-1	96906	FITTING, LUBRICATION	EA	2
95		PC0ZZ		58N3-1	79780	SEAL	EA	8
96		PA000	2520-00-133-9958	3042747-0	92392	PROPELLER SHAFT ASSEMBLY, FRONT AXLE	EA	1
96	1	PA000	2520-00-352-2168	CP6N	70960	CROSS ASSEMBLY, SHAFT	EA	1
96	2	PA0ZZ	5306-00-225-9084	MS90726-29	96906	SCREW, CAP, HEXAGON HEAD: CROSS MTG	EA	8
96	3	PA0ZZ	2520-00-496-1228	6N9	70960	PLATE, LOCKING: CROSS MTG	EA	4
96	4	PA0ZZ	2520-00-028-9964	6N81	70960	PLATE, COVER: CROSS	EA	4
96	5	PA0ZZ	4730-00-172-0010	MS15002-1	96906	FITTING, LUBRICATION	EA	1
96	6	XB0ZZ		3042816-3	92392	TUBE ASSEMBLY	EA	1
96	7	PA0ZZ	4730-00-018-9566	4448854	00000	PLUG, OIL HOLE	EA	1
98	8	PC0ZZ	5330-00-311-5305	2148585	24617	WASHER, FELT: GREASE	EA	1
96	9	PA0ZZ	5310-00-350-4435	31102	70960	WASHER, SPLIT: PACKING RETAINING	EA	1
96	10	PA0ZZ	2520-00-425-3310	2148584	24617	CAP, DUST: PACKING RETAINER	EA	1
96	11	PA0ZZ	5310-00-115-6215	9211140-0	92392	NUT, SELF-LOCKING, HEXAGON: YOKE MTG	EA	1
96	12	PA0ZZ	5310-00-115-6241	3022056-0	92392	WASHER: YOKE MTG	EA	1
96	13	PA0ZZ	2520-00-133-9966	6NYS32-90	79780	YOKE: DRIVE SHAFT	EA	1
96	14	PA0ZZ	2520-00-133-9950	35S32-5	79780	SHAFT	EA	1
97	1	PA0ZZ	4730-00-050-4208	MS15003-1	96906	FITTING, LUBRICATION: DRIVE SHAFTS	EA	3
97	2	PA000	2520-00-895-3230	928-84-25857	80318	PROPELLER SHAFT, CENTER	EA	1
97	3	PA000	2520-00-352-2168	CP6N	70960	CROSS ASSEMBLY, SHAFT	EA	2
97	4	PA0ZZ	5306-00-225-9084	MS90726-29	96906	SCREW, CAP, HEXAGON HEAD: CROSS MTG	EA	16
97	5	PA0ZZ	2520-00-496-1228	6N9	70960	PLATE, LOCKING: CROSS MTG	EA	8
97	6	PA0ZZ	2520-00-028-9964	6N81	70960	PLATE, COVER: CROSS	EA	8
97	7	PA0ZZ		3013807-7	92392	VALVE, RELIEF	EA	2
97	8	PA0ZZ		928-27-25857	79780	TUBE ASSEMBLY, YOKE	EA	1
97	9	PA0ZZ		SPGR5-2	79780	SPRING: BALL	EA	8
97	10	PA0ZZ	3110-00-100-6156	145645	24617	BALL, STEEL	EA	28
97	11	XA0ZZ		6NYSM34-4	79780	SHAFT ASSEMBLY, YOKE	EA	1
97	12	XB0ZZ		5000-275	79136	RING, RETAINING: PACKING	EA	1
97	13	PA0ZZ	5310-00-119-1639	WAR44-3	78500	WASHER, BRASS	EA	1
97	14	PC0ZZ	5330-00-110-5693	SERUR34-1	79780	SEAL, PLAIN: DRIVE SHAFT	EA	1

	(1) ILLUSTRATION (a) FIG NO.	(b) ITEM NO.	(2) SMR CODE	(3) FEDERAL STOCK NUMBER	(4) PART NUMBER	(5) FSCM	(6) DESCRIPTION USABLE ON CODE	(7) U/M	(8) QT INI IN UN
C	97	15	PAOZZ	3120-115-3036	WAR34-4	79780	WASHER, THRUST	EA	1
C	98	1	PAFFF	3805-481-9445	3042742-1	92392	SUPPORT CENTER BEARING	EA	1
C	98	2	PAFZZ	5310-950-0039	MS21044N6	96906	NUT, SELF-LOCKING, HEXAGON: COVER MTG	EA	6
C	98	3	XBFZZ		3042796-7	92392	COVER, BRACKET	EA	2
C	98	4	PCFZZ	5330-113-8352	68X2176	73680	SEAL, PLAIN, ENCASED: CENTER BRACKET	EA	2
C	98	5	XBFZZ		3042808-0	92392	BRACKET: CENTER BEARING	EA	1
C	98	6	PAFZZ	3110-110-8740	65SD22W33F3	80648	BEARING, CENTER	EA	1
C	98	7	PAFZZ	5305-269-2814	MS90726-70	96906	SCREW, CAP, HEXAGON HEAD: COVER MTG	EA	6
C	98	8	PAFZZ	5310-982-6810	MS21044N12	96906	NUT, SELF-LOCKING HEXAGON: CARTRIDGE MTG	EA	4
C	98	9	PAFZZ	5305-948-0803	MS90727-191	96906	SCREW, CAP, HEXAGON HEAD: CARTRIDGE MTG	EA	4
							GROUP 28 - TRANSMISSION OIL FILTER, LINEP AND FITTINGS		
C	99	1	XBOZZ	5340-872-8248	3005382-1	92392	CLAMP, LOOP: FILLER TUBE	EA	1
C	99	2	PAOZZ	6680-110-3966	195423-9	92392	DIP STICK	EA	1
C	99	3	PAOZZ	4710-115-0493	3050180-3	92392	TUBE, FILLER: TRANSMISSION	EA	1
C	99	4	PAOZZ	5310-010-3323	MS35338-10	96906	WASHER, LOCK: FILLER TUBE CLAMP	EA	1
C	99	5	PAOZZ	5305-761-3924	MS90725-107	96906	SCREW, CAP, HEXAGON HEAD: FILLER TUBE CLAMP	EA	1
C	99	6	MOOOO		3050852-7	92392	HOSE ASSEMBLY, FILTER TO TRANSMISSION MANUFACTURE FROM:	EA	1
C	99		PAOZZ	4730-937-0492			FITTING ASSEMBLY, 2 EA REQUIRED	EA	
C	99		PCOZZ	4720-110-1947			HOSE, 5 FT REQUIRED	FT	
C	99	7	PAOZZ	4730-278-3862	5822X12	79470	ELBOW, PIPE TO HOSE: HOSE TO FILTER	EA	2
C	99	8	MOOOO		3050853-5	92392	HOSE ASSEMBLY, TRANSMISSION MANUFACTURE FROM:	EA	1
C	99		PAOZZ	4730-937-0492			FITTING ASSEMBLY, 2 EA REQUIRED	EA	
C	99		PCOZZ	4720-110-1947			HOSE, 3 FT 6 IN. REQUIRED	FT	
C	99	9	MOOOO		3050859-2	92392	HOSE ASSEMBLY, TRANSMISSION TO COOLER MANUFACTURE FROM:	EA	2
C	99		PAOZZ				FITTING ASSEMBLY, PIN, 4 EA REQUIRED	EA	
C	99		PCOZZ	4720-824-4373			HOSE, 5 FT REQUIRED	FT	
C	99	10	PCOZZ	5330-947-3579	4378871-0	92392	GASKET: HOSE TO COOLER	EA	2
C	99	11	PAOZZ	5310-637-9541	MS35338-46	96906	WASHER, LOCK: HOSE TO COOLER	EA	4
C	99	12	PAOZZ	5305-558-4901	MS35301-62	96906	SCREW, CAP,, HEXAGON HEAD: HOSE TO COOLER	EA	1
C	99	13	PAOZZ	5305-269-3211	MS90725-60	96906	SCREW, CAP, HEXAGON HEAD: HOSE TO COOLER	EA	3
C	99	14	XBOZZ		3044364-2	92392	CLAMP, LOOP: HOSE RETAINING	EA	1
C	99	15	PAOZZ		923683-7	92392	SCREW, SELF-TAPPING: LOOP CLAMP	EA	1
C	99	16	PAOZZ	4720-110-3666	3006439-8	92392	HOSE: FILLER TUBE TO TRANSMISSION	EA	1
C	99	17	PAOZZ		MS35842-3	96906	CLAMP: FILLER TUBE HOSE	EA	2
C	99	18	PAOZZ	4730-168-1842	H12420	99103	ADAPTER: HOSE TO TRANSMISSION	EA	1
C	99	19	PAOZZ	4730-915-5477	921203-6	92392	ELBOW, PIPE TO HOSE: TRANSMISSION HOSE	EA	2
C	99	20	PCOZZ	5330-929-9049	921206-9	92392	PACKING, PREFORMED: ELBOW	EA	2
C	99	21	PAOZZ	4730-761-2955	5315X12	79470	ADAPTER, PIPE TO TUBE: HOSE TO TRANSMISSION	EA	1
C	99	22	PCOZZ	5330-929-9049	921206-9	92392	PACKING, PREFORMED	EA	1
C	100	1	PAOZZ		MS35690-525	96906	NUT, PLAIN, HEXAGON: FILTER MTG	EA	4

(1) ILLUSTRATION (a) FIG NO.	(b) ITEM NO.	(2) SMR CODE	(3) NATIONAL STOCK NUMBER	(4) PART NUMBER	(5) FSCM	(6) DESCRIPTION USABLE ON CODE	(7) U/M	(8) QTY INC IN UNIT
100	2	PAOZZ	5310-00-010-3320	MS35338-7	96906	WASHER, LOCK: FILTER MTG	EA	4
100	3	PAOZZ	5310-00-081-4219	MS27183-12	96906	WASHER, FLAT: FILTER MTG	EA	4
100	4	PAOZZ		923683-7	92392	SCREW, SELF-TAPPING: PLATE MTG	EA	2
100	5	XBOZZ		3047529-7	92392	PLATE, MOUNTING: OIL FILTER	EA	1
100	6	P0000	4330-00-168-1828	6674819	81321	FILTER ASSEMBLY, OIL	EA	1
100	7	PAOZZ	5310-00-010-3319	904204-5	92392	WASHER, LOCK: BRACKET MTG	EA	1
100	8	PAOZZ	5310-00-011-4380	114380	00000	NUT, PLAIN, SQUARE: BRACKET MTG	EA	2
100	9	XBOZZ		34428	81321	BRACKET: OIL FILTER	EA	1
100	10	XAOZZ		64555	81321	BODY, FILTER	EA	1
100	11	PAOZZ	4330-00-217-3588	33316-13	81321	ELEMENT ASSEMBLY, OIL	EA	1
100	12	PCOZZ	5330-00-110-5694	6664119	81321	PACKING, PREFORMED ELEMENT	EA	1
100	13	PAOZZ	5305-00-269-3214	MS90725-64	96906	SCREW, CAP, HEXAGON HEAD: HALF CLAMP	EA	2
100	14	PAOZZ	5310-00-637-9541	MS35338-46	96906	WASHER, LOCK: HALF CLAMP	EA	2
100	15	XAOZZ		64549	81321	CLAMP, HALF: COVER MTG	EA	2
100	16	XBOZZ		6674144	81321	COVER ASSEMBLY, FILTER	EA	1
100	17	PAOZZ	5305-00-071-2235	MS90725-16	96906	SCREW, MACHINE: CLAMP MTG	EA	2
100	18	PAOZZ	5306-00-225-9088	MS90726-33	96906	SCREW, CAP, HEXAGON HEAD: FILTER MTG	EA	4
100		XBOZZ		3053252-7	92392	BRACKET	EA	1
100		PAOZZ		916383-3	92392	SCREW, CAP, HEXAGON HEAD: BRACKET MTG	EA	1
100		PAOZZ		911115-4	92392	WASHER, FLAT: BRACKET	EA	2
100		PAOZZ	5310-00-010-3319	904206-0	92392	WASHER, LOCK: BRACKET	EA	1
100		PAOZZ		911041-2	92392	NUT, PLAIN, HEXAGON: BRACKET	EA	1
100		XBOZZ		3011248-6	92392	CLIP	EA	2
100		PAOZZ		916225-6	92392	SCREW, CAP, HEXAGON HEAD: CILP	EA	1
						GROUP 29 - TRANSMISSION ASSEMBLY CONTROLS AND TORQUE CONVERTER		
101	1	PAOZZ	5355-00-812-4141	3001171-2	92392	KNOB, LEVER	EA	1
101	2	XBOZZ		3051725-4	92392	PLATE: CONTROL LEVER	EA	1
101	3	XBOZZ		3051759-3	92392	LEVER, TRANSMISSION CONTROL AND START	EA	1
101	4	PAOZZ	5310-00-269-2809	MS90726-66	96906	SCREW, CAP, HEXAGON HEAD: LEVER MTG	EA	1
101	5	PAOZZ	5310-00-637-9541	MS35338-46	96906	WASHER, LOCK: LEVEL BALL JOINT CLAMP MTG	EA	7
101	6	PAOZZ	5310-00-543-5973	MS35691-625	96906	NUT, PLAIN, HEXAGON: BALL JOINT AND LEVER MTG	EA	5
101	7	XBOZZ		3051750-2	92392	CLAMP, SUPPORT: CONTROL LEVER	EA	1
101		XBOZZ		3048960-3	51588	BUSHING: CLAMP	EA	1
101	8	XBOZZ		3050390-8	92392	CLAMP, LEVER SUPPORT	EA	1
101	9	PAOZZ	5310-00-269-2810	MS90726-68	96906	SCREW, CAP, HEXAGON HEAD: SUPPORT CLAMP	EA	2
101	10	PAOZZ		3016399-2	92392	SPRING, HELICAL, COMPRESSION LEVER RETURN	EA	1
101	11	PAOZZ	5310-00-809-8541	MS27183-27	96906	WASHER, FLAT: RETURN SPRING	EA	1
101	12	XBOZZ		3050370-0	92392	ROD, CLUTCH CONTROL	EA	1
101	13	XBOZZ		3050319-7	92392	ROD, CONNECTING	EA	1
101	14	PAOZZ	3930-00-904-5303	R109	78643	BALL JOINT: ROD	EA	4
101	15	XBOZZ		3050400-5	92392	LEVER: TRANSMISSION CONTROL	EA	1
101	16	XBOZZ		3026405-5	92392	ROD, THREADED: CONTROL LEVER	EA	1

	(1) ILLUSTRATION (a) FIG NO.	(b) ITEM NO.	(2) SMR CODE	(3) FEDERAL STOCK NUMBER	(4) PART NUMBER	(5) FSCM	(6) DESCRIPTION USABLE ON CODE	(7) U/M	
C	101	17	XBOZZ		3050771	92392	LEVER, CONNECTING	EA	
C	101	18	PAOZZ	5315-010-3496	103496	00000	PIN, STRAIGHT, HEADED: SHIFT BAR	EA	
C	101	19	XBOZZ		3050769-3	92392	BAR, CONNECTING	EA	
C	101	20	PAOZZ	5315-298-1481	MS24665-357	96906	PIN, COTTER: SHIFT BAR	EA	
C	101	21	XBOZZ		3048860-5	92392	WASHER, FLAT: CONNECTING LEVER	EA	
C	101	22	PAOZZ	3120-132-6952	3045248-6	92392	BEARING, ROD END: CONNECTING LEVER	EA	
C	101	23	PAOZZ	5310-010-3323	MS35338-10	96906	WASHER, LOCK: ROD END BEARING	EA	
C	101	24	PAOZZ		MS15795-14	96906	WASHER, FLAT: ROD END BEARING	EA	
C	101	25	PAOZZ	5310-732-0560	MS51968-14	96906	NUT, PLAIN, HEXAGON: ROD END BEARING	EA	
C	101	26	PAOZZ	3120-132-6953	3018142-4	92392	BEARING, ROD END: LEVER	EA	
C	101	27	PAOZZ	5310-010-3325	MS35338-12	96906	WASHER, LOCK: ROD END BEARING	EA	
C	101	28	PAOZZ	5305-725-4098	MS90726-160	96906	SCREW, CAP, HEXAGON HEAD: ROD END BEARING	EA	
C	101	29	PAOZZ	5315-781-6532	MS16562-161	96906	PIN, SPRING: RETURN SPRING	EA	
C	101	30	PAOZZ	5310-269-2809	MS90726-66	96906	SCREW, CAP, HEXAGON HEAD: CONTROL LEVER PLATE	EA	
C	101	31	PAOZZ		MS35388-4	96906	WASHER, LOCK: CONTROL LEVER PLATE	EA	
C	102	1	PAOZZ	5305-071-2066	MS90728-109	96906	SCREW, CAP, HEXAGON HEAD: PLATE MTG	EA	
C	102	2	XBOZZ		6774012	73342	PLATE, FLEXIBLE DISC	EA	
C	102	3	PAFZZ	2520-080-6993	6774007	73342	DISC, FLEXIBLE	EA	
C	102	4	PAFZZ	2520-133-9951	6777415	73342	DISC ASSEMBLY, FELXIBLE	EA	
C	102	5	PAOZZ	5310-984-3807	MS51922-12	96906	NUT, SELF-LOCKING, HEXAGON: COVER MTG	EA	2
C	102	6	XBHZZ		6774008	73342	COVER ASSEMBLY, PUMP	EA	
C	102	7	KBHZZ	5330-631-8125	6753866	73342	PACKING, PREFORMED (PART OF KIT, FSN 2520-876-8739)	EA	
C	102	8	PAFZZ	4730-.	MS49005-8	96906	PLUG: HOUSING	EA	
C	102	9	KBHZZ		6832803	73342	DIAPHRAGM ASSEMBLY (PART OF KIT, FSN 2520-876-8739)	EA	
C	102	10	KBHZZ		6773492	73342	SEAL: HOUSING (PART OF KIT, FSN 2520-876-8739)	EA	
C	102	11	PAFZZ	5305-269-3242	MS90727-66	96906	BOLT, MACHINE: FLEXIBLE DISC MTG	EA	
C	103	1	PAHZZ	3110-554-5302	3208	43334	BEARING: TURBINE SUPPORT	EA	
C	103	2	PAHZZ	2520-018-2190	6777578	73342	TURBINE ASSEMBLY	EA	
C	103	3	XAHZZ		6776508	73342	PIN	EA	
C	103	4	PAHZZ		3211	43334	BEARING: TURBINE	EA	
C	103	5	PAHZZ	2520-018-2192	6831811	73342	TURBINE	EA	
C	103	6	PAHZZ		9409514	73342	BOLT, MACHINE: LOCK PLATE	EA	1
C	103	7	KBHZZ		6773486	73342	PLATE, LOCKING: PUMP RETAINER (PART OF KIT, FSN 2520-876-8739)	EA	
C	103	8	PAHZZ		6777575	73342	PUMP ASSEMBLY	EA	
C	103	9	PAHZZ	5306-679-8109	6755988	73342	BOLT, MACHINE: PUMP MTG	EA	2
C	103	10	PAHZZ		6830114	73342	RING, RETAINING: SPUR GEAR	EA	
C	103	11	PAHZZ		6776727	73342	GEAR, SPUR	EA	
C	103	12	PAHZZ	3110-554-1310	5211W	43334	BEARING, BALL: SPUR GEAR	EA	
C	103	13	KBHZZ	5330-919-2235	6773490	73342	GASKET, PUMP MTG (PART OF KIT, FSN 2520-876-8739)	EA	
C	103	14	XBHZZ		6773491	73342	RETAINER, PUMP	EA	
C	103	15	PAHZZ		6777576	73342	SPACER: PUMP	EA	
C	103	16	PAHZZ		6777577	73342	STATOR: TORQUE CONVERTER	EA	
C	103	17	PAHZZ		6703058	73342	RING, RETAINING: TURBINE	EA	

(1) ILLUSTRATION (a) FIG NO.	(b) ITEM NO.	(2) SMR CODE	(3) FEDERAL STOCK NUMBER	(4) PART NUMBER	(5) FSCM	(6) DESCRIPTION USABLE ON CODE	(7) U/M	(8) QTY INC IN UNIT
104		PAFHH	2520-028-5585	6833536	73342	TRANSMISSION ASSEMBLY	EA	1
104	1	PAHZZ		6776965	73342	GEARSHAFT: DRIVEN, ACCESSORY	EA	1
104	2	PAHZZ		6831205	73342	HOUSING ASSEMBLY, CONVERTER	EA	1
104	3	PAHZZ		6773487	73342	BEARING, SLEEVE	EA	1
104	4	PAHZZ	4730-693-7073	6765238	73342	PLUG, PIPE: FILL AND LEVEL	EA	1
104	5	XAHZZ		6831161	73342	HOUSING: CONVERTER	EA	1
104	6	PAFZZ	5340-081-9235	6770408	73342	PLUG, EXPANSION	EA	2
104	7	PAHZZ		141281	73342	PIN, STRAIGHT, HEADLESS: CONVERTER HOUSING TO TRANSMISSION HOUSING	EA	2
104	8	PAHZZ	5305-069-5575	MS90725-88	96906	SCREW, CAP, HEXAGON HEAD: HOUSING MTG	EA	23
104	9	PAHZZ	5310-010-3322	904207-8	92392	WASHER, LOCK: HOUSING MTG	EA	24
104	10	PAHZZ	5310-209-1489	MS15795-16	96906	WASHER, FLAT: HOUSING MTG	EA	24
104	11	PAHZZ	3110-592-9967	907428	73342	BEARING: GEARSHAFT	EA	1
104	12	PAHZZ	5365-281-6452	7708225	00000	RING, RETAINING: BEARING	EA	1
104	13	PAHZZ	3110-812-7801	906729	24617	BEARING, BALL: GEARSHAFT	EA	1
104	14	PAHZZ		6773488	73342	SLEEVE: CONVERTER GROUND	EA	1
104	15	XBHZZ	2520-932-0859	6773483	73342	SEAL: GEARSHAFT (PART OF KIT, FSN 2520-876-8739)	EA	2
104	16	PAHZZ	3110-850-0443	905599	73342	BEARING BALL: DRIVE GEAR	EA	1
104	17	PAHZZ		6831814	73342	GEARSHAFT: SECOND TURBINE	EA	1
104	18	PAHZZ	5306-940-9011	9409011	24617	BOLT, SELF-LOCKING: SLEEVE MTG	EA	4
104	19	PAHZZ		6757447	73342	VALVE, CHECK	EA	2
104	20	PAHZZ		6773551	73342	SPRING: VALVE GUIDE	EA	1
104	21	PAHZZ	2520-080-6756	6834176	73342	GUIDE, VALVE	EA	2
104	22	PAHZZ		6773689	73342	SPRING: VALVE GUIDE	EA	1
104	23	PAHZZ		6773494	73342	GEARSHAFT: FIRST TURBINE DRIVE	EA	1
104	24	PAHZZ	3110-198-2848	954528	73342	BEARING, BALL: GEARSHAFT	EA	1
104	25	PAHZZ		8619650	73342	RACE: BEARING, INNER	EA	1
104	26	PAHZZ	3110-913-6116	9414207	73342	BEARING, ROLLER, NEEDLE	EA	1
104	27	PAHZZ		8619652	73342	RACE, BEARING, OUTER	EA	1
104	28	PAHZZ		MS35295-4	96906	SCREW, CAP, HEXAGON HEAD: HOUSING MTG	EA	1
105	1	PAHZZ		907808	73342	BEARING, BALL: DRIVEN GEAR	EA	3
105	2	XAHZZ		560565	00000	NUT, SELF-LOCKING, HEXAGON: COLLECTOR	EA	12
105	3	PAHZZ		6779799	73342	GEARSHAFT: SECOND TURBINE, DRIVEN	EA	1
105	4	PAHZZ	3110-045-7322	304444060	92392	BEARING: GEARSHOT	EA	1
105	5	PAHZZ	2520-401-9270	3053761-7	92392	CLUTCH KIT, FREE WHEEL	EA	1
105	6	XAHZZ	5306-085-3065	6774680	73342	BOLT, MACHINE: COLLECTOR MTG	EA	12
105	7	XBHZZ		6777501	73342	SPACER: BEARING	EA	1
105	8	XBHZZ		6774672	73342	SPACER: BEARING	EA	1
106	1	PAHZZ		6777842	73342	GEAR, SPUR: ACCESSORY DRIVE	EA	1
106	2	PAHZZ		907446	73342	BEARING, BALL: SPUR GEAR	EA	1
106	3	PAHZZ		6750127	73342	RING, RETAINING: BEARING	EA	1
106	4	PAHZZ		6773604	73342	SHAFT ASSEMBLY, DRIVE	EA	1
106	5	PAHZZ		675804	73342	PLUG	EA	1
106	6	PAHZZ		907445	73342	BEARING, BALL: SHAFT	EA	1

(1) ILLUSTRATION (a) FIG NO.	(b) ITEM NO.	(2) SMR CODE	(3) FEDERAL STOCK NUMBER	(4) PART NUMBER	(5) FSCM	(6) DESCRIPTION USABLE ON CODE	(7) U/M	(8) QTY INC IN UNIT
106	7	KBHZZ	5330-869-4226	6773201	73342	SEAL, PLAIN, ENCASED: DRIVE SHAFT (PART OF KIT, FSN 2520-876-8739)	EA	1
107	1	PAHZZ	3110-869-9585	907429	73342	BEARING, BALL: DRIVE GEAR	EA	1
107	2	PAHZZ		6773467	73342	GEAR ASSEMBLY, SPUR: DRIVE	EA	1
107	3	PAHZZ	5315-234-2346	3044404-6	92392	PIN: SPUR GEAR	EA	6
107	4	PAHZZ	5340-281-6452	6750258	73342	RING, RETAINING: BEARING	EA	1
107	5	PAHZZ		6755903	73342	RING, RETAINING: BEARING	EA	1
107	6	PAHZZ	5310-982-6816	MS21044C5	96906	NUT, SELF-LOCKING, HEXAGON: LOCK PLATE MTG	EA	12
107	7	PAHZZ		6778498	73342	PLATE, LOCK	EA	6
107	8	PAHZZ		6777592	73342	PLATE, CLUTCH, INTERNAL	EA	2
107	9	PAHZZ	2520-718-7358	6759504	73342	PLATE, CLUTCH, EXTERNAL SPLINED	EA	1
107	10	PAHZZ		6777591	73342	HUB	EA	1
107	11	PAHZZ	5306-940-9018	9409018	00000	BOLT, SELF-LOCKING: LOCK PLATE MTG	EA	12
107	12	PAHZZ		907808	73342	BEARING, BALL: HOUSING	EA	1
107	13	PAHZZ	5305-716-8181	MS90726-118	96906	SCREW, CAP, HEXAGON HEAD: HOUSING MTG	EA	6
107	14	XBHZZ		6773461	73342	LOCKTAB: HOUSING MTG (PART OF KIT, FSN 2520-876-8739)	EA	6
107	15	PAHZZ		6830726	73342	HOUSING, CLUTCH	EA	1
107	16	XAHZZ		6830727	73342	HOUSING, CLUTCH	EA	1
107	17	PAHZZ	3120-089-0187	6757034	73342	BEARING, SLEEVE: CLUTCH HOUSING	EA	1
107	18	PCHZZ	2520-022-3924	6776999	73342	KIT, SEAL AND EXPANDER	EA	1
107	19	PAHZZ		6830730	73342	PISTON, CLUTCH: HIGH RANGE	EA	1
107	20	KBHZZ		6754823	73342	SEAL: PISTON (PART OF KIT, FSN 2520-876-8739)	EA	1
107	21	PAHZZ	2520-679-6936	6756134	73342	SPRING: PISTON RETURN	EA	1
107	22	PAHZZ		6756739	73342	RING, RETAINING	EA	1
108	1	PAHZZ	3020-847-2514	6757164	73342	GEAR, INTERNAL TEETH	EA	1
108	2	PAHZZ		6773482	73342	CARRIER ASSEMBLY, FORWARD CLUTCH	EA	1
108	3	PAHZZ		6755007	73342	RING, RETAINING: CARRIER	EA	1
108	4	PAHZZ	2520-718-7361	6775541	73342	PLATE, CLUTCH, INTERNAL SPLINED	EA	5
108	5	PAHZZ	2520-718-7358	6759504	73342	PLATE, CLUTCH, EXTERNAL SPLINED	EA	5
108	6	PAHZZ		6830433	73342	GEAR, INTERNAL-EXTERNAL TEETH, FORWARD CLUTCH	EA	1
08	7	PCHZZ	2520-999-9037	6776998	73342	KIT, SEAL AND EXPANDER	EA	1
08	8	PAHZZ		6773479	73342	HOUSING, FORWARD CLUTCH	EA	1
08	9	PAHZZ	5306-616-2015	9409231	73342	BOLT, SELF-LOCKING: HOUSING MTG	EA	10
08	10	PAHZZ	4730-516-2922	11523	77445	PLUG, HOUSING	EA	1
08	11	PAHZZ	2520-894-7537	6777453	73342	PISTON, FORWARD CLUTCH	EA	1
08	12	PCHZZ	5365-922-8692	6776995	73342	KIT, SEAL AND EXPANDER	EA	1
09	1	PAHZZ	2520-757-0179	6777452	73342	PISTON, REVERSE CLUTCH	EA	1
09	2	PCHZZ	2520-999-9037	6776998	73342	KIT, SEAL AND EXPANDER	EA	1
09	3	PCHZZ	5365-922-8692	6776995	73342	KIT, SEAL AND EXPANDER	EA	1
09	4	PAHZZ		6773470	73342	GEAR, SPUR	EA	1
09	5	PAHZZ	5360-922-6228	6775437	73342	SPRING: PISTON RETURN	EA	12
09	6	PAHZZ	2520-876-8884	6774714	73342	PIN: PISTON RETURN	EA	12
09	7	PAHZZ		6777263	73342	ANCHOR ASSEMBLY, CLUTCH	EA	1
09	8	XAHZZ		6777262	73342	PIN, ANCHOR	EA	6

	ILLUSTRATION (a) FIG NO.	ILLUSTRATION (b) ITEM NO.	SMR CODE	NATIONAL STOCK NUMBER	PART NUMBER	FSCM	DESCRIPTION USABLE ON CODE
	109	9	PAHZZ	2520-00-718-7361	6775541	73342	DISC, CLUTCH, INTERNAL SPLINED
	109	10	PAHZZ	2520-00-718-7358	6759504	73342	DISC, CLUTCH, EXTERNAL SPLINED
	109	11	PAHZZ		6777485	73342	CARRIER ASSEMBLY, REVERSE CLUTCH
	110	1	PAFZZ	5310-00-016-7142	MS21083N20	96906	NUT, LOCK, HEXAGON: YOKE MTG
	110	2	PAFZZ	5310-00-203-1110	6773457	73342	WASHER, FLAT: YOKE MTG
C	110	3	PAFZZ	2520-00-133-9961	6880069	73342	YOKE: DRIVE SHAFT
	110	4	PCFZZ	2520-00-876-8805	6773466	73342	SEAL, PLAIN, ENCASED: OUTPUT SHAFT (PART OF KIT, NSN 2520-00-876-8739)
	110	5	PAHZZ		6753893	73342	RING, RETAINING: BEARING
	110	6	PAHZZ		907835	73342	BEARING, BALL: OUTPUT SHAFT
	110	7	PAHZZ		6777509	73342	SHAFT, OUTPUT
	110	8	PAHZZ		6773478	73342	GEAR, SPUR: OUTPUT SHAFT
	110	9	XBHZZ	2520-00-933-0823	6774572	73342	CAP: DISCONNECT HOLE
	110	10	PAHZZ	3110-00-760-7353	907819	73342	BEARING, BALL: OUTPUT SHAFT
C	110	11	PAFZZ	2520-00-133-9957	6880162	73342	YOKE: OUTPUT SHAFT
	111	1	PAFZZ	5305-00-269-3216	MS90725-66	96906	SCREW, CAP, HEXAGON HEAD: PUMP MTG
	111	2	PAFZZ	5310-00-637-9541	MS35338-46	96906	WASHER, LOCK: PUMP MTG
	111	3	PCFZZ	5330-00-932-0864	6777316	73342	GASKET: PUMP MTG (PART OF KIT, NSN 2520-00-876-8739)
	111	4	PAFHH	2520-00-025-9164	6776960	73342	PUMP ASSEMBLY, OIL CHARGING
	111	5	PCHZZ	5330-00-941-8569	6769590	73342	SEAL, PLAIN, ENCASED: PUMP SHAFT
	111	6	XAHZZ		6776429	73342	BODY, PUMP
	111	7	XAHZZ		6776425	73342	GEAR, DRIVE
	111	8	PCHZZ	5330-00-111-5128	6773543	73342	GASKET: COVER TO BODY
	111	9	XBHZZ		6777354	73342	COVER, PUMP
	111	10	XAHZZ		6776427	73342	GEAR ASSEMBLY, DRIVEN
	111	11	PAHZZ		9417600	73342	BEARING, NEEDLE: GEAR TO SHAFT
	111	12	PAFZZ	5305-00-269-3220	MS90725-70	96906	SCREW, CAP, HEXAGON HEAD: PUMP MTG
	112	1	PAFZZ	5305-00-269-3218	MS90725-68	96906	SCREW, CAP, HEXAGON HEAD: VALVE MTG
	112	2	PAFZZ	5310-00-637-9541	MS35338-46	96906	WASHER, LOCK: VALVE MTG
	112	3	PAFZZ	5305-00-269-3211	MS90725-60	96906	SCREW, CAP, HEXAGON HEAD: VALVE MTG
	112	4	PAFZZ		6831382	73342	GASKET: VALVE (PART OF KIT, NSN 2520-00-876-8739)
	112	5	PAFHH	2520-00-133-9996	6831228	73342	VALVE ASSEMBLY, CONTROL
	112	6	XBHZZ		6773618	73342	PLUG: REGULATOR VALVE
	112	7	KBHZZ	5365-00-776-7238	6701353	24617	GASKET: PLUG (PART OF KIT, NSN 2520-00-876-8739)
	112	8	PAHZZ	4810-00-168-1808	6831187	73342	VALVE, REGULATOR
	112	9	XAHZZ		6831185	73342	BODY, VALVE
	112	10	PAHZZ	3110-00-602-4448	7710550	19207	BALL
	112	11	PAHZZ	2520-00-133-9965	6773622	73342	PLUG, BALL
	112	12	PAHZZ	2520-00-133-9949	6773592	73342	STOP, VALVE
	112	13	PAHZZ	2520-00-105-9823	6773602	73342	RETAINER, SPRING
	112	14	PAHZZ		6830363	73342	SPRING, REGULATOR VALVE
	112	15	PAHZZ	2520-00-115-3998	6830365	73342	SPRING, TRIMMER VALVE
	112	16	PAHZZ	2520-00-133-9956	6775645	73342	PLUG, TRIMMER VALVE
	112	17	KBHZZ	5330-00-105-4165	6773607	73342	GASKET: PLUG (PART OF KIT, NSN 2520-00-876-8739)

	(1) ILLUSTRATION (a) FIG NO.	(b) ITEM NO.	(2) SMR CODE	(3) FEDERAL STOCK NUMBER	(4) PART NUMBER	(5) FSCM	(6) DESCRIPTION USABLE ON CODE	(7) U/M	QT INC IN UNI
C	112	18	XBHZZ		6773616	73342	PLUG: VALVE	EA	1
C	112	19	PAHZZ		6758503	73342	SPRING: VALVE	EA	1
C	112	20	PAHZZ	2520-133-9952	6774262	73342	VALVE: CLUTCH CUT-OFF	EA	1
C	112	21	PAHZZ	3810-916-1925	6771914	73342	PLUG: VALVE	EA	1
C	112	22	KBHZZ	5330-737-4265	6750558	73342	PACKING, PREFORMED: PLUG (PART OF KIT, FSN 2520-876-8739)	EA	1
C	112	23	KBHZZ		6772740	73342	GASKET: PLUG (PART OF KIT, FSN 2520-876-8739)	EA	2
C	112	24	KBHZZ	3810-916-1926	6771913	73342	PLUG, CUP (PART OF KIT, FSN 2520-876-8739)	EA	1
C	112	25	XBHZZ	3810-916-1937	6758306	73342	PLUG: VALVE	EA	1
C	112	26	PAHZZ	4730-018-9566	444612	24617	PLUG, PIPE: VALVE PLUG	EA	1
C	112	27	KBHZZ	5330-115-6152	6772050	73342	SEAL: VALVE (PART OF KIT, FSN 2520-876-8739)	EA	1
C	112	28	PAHZZ	2520-133-9997	6831188	73342	VALVE: RANGE SELECTOR	EA	1
C	112	29	PAHZZ	5360-105-9824	6770253	73342	SPRING: DETENT BALL	EA	2
C	112	30	XBHZZ	4730-122-4008	6774155	73342	PLUG: DETENT BALL	EA	1
C	112	31	PAHZZ	3110-100-6159	145657	73342	BALL, DETENT	EA	2
C	113	1	PAOZZ	4730-034-5151	143938	73342	PLUG, PIPE: HOUSING	EA	1
C	113	2	PAOZZ	4730-018-9566	444612	73342	PLUG, PIPE	EA	2
C	113	3	PAHZZ	5305-269-3208	MS90725-57	96906	SCREW, CAP, HEXAGON HEAD: TUBE MTG	EA	1
C	113	4	PAHZZ	2520-080-6919	6777320	73342	TUBE, SUCTION	EA	1
C	113	5	XBHZZ		6777322	73342	NUT: SUCTION TUBE	EA	1
C	113	6	KBHZZ	2520-932-0862	6777323	73342	SEAL: SUCTION TUBE (PART OF KIT, FSN 2520-876-8739)	EA	1
C	113	7	PAOZZ	4730-187-4241	444672	73342	PLUG, PIPE: HOUSING HOLE	EA	1
C	113	8	XBOZZ	5340-081-9231	6777173	73342	PLUG: REMOTE FILTER	EA	1
C	113	9	KBHZZ	5330-932-0860	6773570	73342	GASKET: HOUSING (PART OF KIT, FSN 2520-876-8739)	EA	1
C	113	10	XBHZZ		6777355	73342	HOUSING, TRANSMISSION	EA	1
C	113	11	PAOZZ	2520-133-9959	8351319	00000	BREATHER	EA	1
C	113	12	PCOZZ	5330-311-5189	6750265	73342	GASKET: COVER AND STRAINER (PART OF KIT, FSN 2520-876-8739)	EA	2
C	113	13	XBOZZ		6758337	73342	COVER: TRANSMISSION	EA	1
C	113	14	PAOZZ	5310-637-9541	MS35338-46	96906	WASHER, LOCK: COVER AND STRAINER	EA	12
C	113	15	PAOZZ	5305-269-3210	MS90725-59	96906	SCREW, CAP, HEXAGON HEAD: COVER AND STRAINER	EA	12
C	113	16	KBHZZ		6773477	73342	GASKET: REAR COVER (PART OF KIT, FSN 2520-876-8739)	EA	1
C	113	17	KBHZZ		6776396	73342	SEAL: REAR COVER (PART OF KIT, FSN 2520-876-8739)	EA	1
C	113	18	XBHZZ		6777505	73342	COVER: TRANSMISSION, REAR	EA	1
C	113	19	PAHZZ		444687	00000	PLUG, PIPE: COVER	EA	1
C	113	20	PAHZZ	5310-637-9541	MS35338-46	96906	WASHER, LOCK: REAR COVER MTG	EA	19
C	113	21	PAHZZ	5305-269-3212	MS90725-61	96906	SCREW, CAP, HEXAGON HEAD: REAR COVER MTG	EA	19
C	113	22	PAOZZ	3810-916-1932	444592	73342	PLUG, DRAIN	EA	1
C	113	23	PAOZZ	2520-080-6924	6777318	73342	STRAINER ASSEMBLY, OIL	EA	1
C	113	24	PAHZZ	2520-080-6923	6773460	73342	PIN, ANCHOR	EA	1
C	113	25	XBFZZ		3042894-0	92392	PLATE, MOUNTING, TRANSMISSION	EA	2
C	113	26	PAFZZ	5310-982-6809	MS21044LN10	96906	NUT, SELF-LOCKING, HEXAGON: MTG PLATE	EA	4
C	113	27	PAFZZ	5310-889-8519	MS27183-22	96906	WASHER, FLAT: PLATE MTG	EA	4
C	113	28	PAFZZ	5305-851-4561	MS90727-165	96906	SCREW, CAP, HEXAGON HEAD: MTG PLATE	EA	4
C	113	29	PAFZZ	5305-724-5910	MS90725-162	96906	SCREW, CAP, HEXAGON HEAD: MTG PLATE	EA	8

(1) ILLUSTRATION (a) FIG NO.	(b) ITEM NO.	(2) SMR CODE	(3) FEDERAL STOCK NUMBER	(4) PART NUMBER	(5) FSCM	(6) DESCRIPTION USABLE ON CODE	(7) U/M	(8) QTY INC IN UNIT
113	30	PAFZZ	5310-010-3325	MS35338-12	96906	WASHER, LOCK: MTG PLATE	EA	8
102		PCHZZ	2520-876-8739	6777515	73342	GASKET KIT, TRANSMISSION (CONSISTS OF)	EA	1
102	7					1-PACKING		
102	9					1-DIAPHRAGM ASSEMBLY		
102	10					1-SEAL		
103	7					6-PLATE		
103	13					1-GASKET		
104	15					2-SEAL		
107	14					6-LOCKTAB		
107	20					1-SEAL		
110	4					2-SEAL		
111	3					1-GASKET		
112	4					1-GASKET		
112	7					2-GASKET		
113	6					1-SEAL		
113	9					1-GASKET		
113	12					2-GASKET		
113	16					1-GASKET		
113	17					1-SEAL		
		PADZZ	2520-876-8739	6777515	73342	GASKET KIT: TRANSMISSION (CONSISTS OF)	EA	1
106	7					1-SEAL		
112	17					1-GASKET		
112	22					1-PACKING		
112	23					1-GASKET		
112	24					1-PLUG		
112	27					1-SEAL		
		KBHZZ	2520-904-8110	6771273	73342	SEAL, PLAIN, ENCASED	EA	1
		KBHZZ		6776749	73342	EXPANDER	EA	1
		KBHZZ		6772050	73342	SEAL	EA	1
		KBHZZ	2520-767-8724	6770432	73342	SEAL	EA	1
		KBHZZ	5330-599-6200	6703159	73342	SEAL	EA	1
		KBHZZ		6773543	73342	GASKET	EA	1
		KBHZZ		6772740	73342	GASKET	EA	1
		KBHZZ		6777057	73342	SHEET, INSTRUCTION	EA	1
		KBHZZ		6774342	73342	SEAL	EA	1

(1) ILLUSTRATION (a) FIG NO.	(b) ITEM NO.	(2) SMR CODE	(3) FEDERAL STOCK NUMBER	(4) PART NUMBER	(5) FSCM	(6) DESCRIPTION USABLE ON CODE	(7) U/M	(8) QTY INC IN UNI
						GROUP 30 - PACKING BRAKE AND LEVER		
C 114	1	PAOZZ	2530-972-8356	6110042-775	92867	LEVER ASSEMBLY, PARKING BRAKE	EA	1
C 114	2	PAOZZ	5310-010-3320	MS35338-7	96906	WASHER, LOCK: LEVER MTG	EA	1
C 114	3	PAOZZ	5310-012-0368	MS35690-525	96906	NUT, PLAIN, HEXAGON: LEVER MTG	EA	1
C 114	4	PAOZZ	5310-637-9941	MS35338-46	96906	WASHER, LOCK: LEVER MTG	EA	2
C 114	5	PAOZZ	5310-543-5973	MS35691-625	96906	NUT, PLAIN, HEXAGON: LEVER MTG	EA	2
C 114	6	PAOZZ	5315-236-8359	MS24665-370	96906	PIN, COTTER: ROD MTG	EA	3
C 114	7	PAOZZ	5315-010-3496	103496	00000	PIN, STRAIGHT, HEADED: ROD MTG	EA	2
C 114	8	XBOZZ	5340-351-0183	144243	24617	CLEVIS, ROD END: CONTROL ROD	EA	1
C 114	9	PAOZZ		MS35691-525	96906	NUT, PLAIN, HEXAGON: CONTROL ROD	EA	1
C 114	10	XBOZZ		3050433-6	92392	ROD, CONNECTING	EA	1
C 114	11	PAOZZ	5310-012-2236	122236	00000	NUT, PLAIN, HEXAGON: CLEVIS ADJUSTING	EA	1
C 114	12	XBOZZ	5340-414-6976	917664-5	92392	CLEVIS, ROD END: CONTROL ADJUSTING	EA	1
C 114	13	XBOZZ		3050351-0	92392	LEVER: CROSS SHAFT	EA	1
C 114	14	PAOZZ	5310-012-0368	MS35690-525	96906	NUT, PLAIN, HEXAGON: PILLOW BLOCK MTG	EA	4
C 114	15	PAOZZ	5310-010-3320	MS35338-7	96906	WASHER, LOCK: PILLOW BLOCK MTG	EA	4
C 114	16	XBOZZ		3048256-6	92392	HOUSING, BEARING UNIT, PILLOW BLOCK	EA	2
C 114	17	PAOZZ	5310-081-4219	MS27183-12	96906	WASHER, FLAT: PILLOW BLOCK MTG	EA	4
C 114	18	PAOZZ	5306-225-9089	MS90726-34	96906	BOLT, MACHINE: PILLOW BLOCK MTG	EA	4
C 114	19	XBOZZ		3050318-9	92392	ROD, CONNECTING	EA	1
C 114	20	PAOZZ	5310-720-8536	MS35691-725	96906	NUT, PLAIN, HEXAGON: CLEVIS ADJUSTING	EA	1
C 114	21	XBOZZ		917665-2	92392	CLEVIS, ROD END: CONNECTING ROD	EA	1
C 114	22	XBOZZ		917647-0	92392	PIN, STRAIGHT, HEADED: CLEVIS	EA	1
C 114	23	PAOZZ	5305-269-2808	MS90726-65	96906	SCREW, CAP, HEXAGON HEAD: LEVER MTG, 3/8-24 THD SIZE, 1 3/4 IN. LG	EA	1
C 114	24	PAOZZ	5306-225-9094	MS90726-39	96906	BOLT, MACHINE: LEVER MTG, 5/16-24 THD SIZE, 1 3/4 IN. LG	EA	1
C 115		PAFFF	2530-133-9999	6773550	73342	BRAKE ASSEMBLY, PARKING	EA	1
C 115	1	XBFZZ		6778189	73342	PLATE, BACKING	EA	1
C 115	2	PAFZZ	2530-080-6779	2455168	73342	ROLLER	EA	1
C 115	3	PAFZZ	2530-080-6770	6778190	73342	SHOE ASSEMBLY, BRAKE	EA	2
C 115	4	PAFZZ	5360-629-6199	9027076	73342	SPRING: SHOE RETURN	EA	2
C 115	5	XBFZZ		6778194	73342	LEVER, BRAKE	EA	1
C 115	6	XBFZZ		6778191	73342	DRUM, BRAKE	EA	1
C 115	7	PAFZZ	5306-940-9052	9409052	00000	BOLT, MACHINE: BRAKE DRUM MTG	EA	4
C 115	8	PAFZZ	5306-292-4588	9409033	24617	BOLT, MACHINE: BACKING PLATE MTG	EA	4
C 115		PAFZZ	2530-920-6791	2000L246	92392	KIT, LINING	EA	1
C 115		XAFZZ		2740Y623	79780	LINING	EA	2
C 115		XAFZZ		RV354	79780	RIVET: LINING	EA	24
						GROUP 31 - WHEEL AND TIRE		
C 116	1	XBOZZ	2530-412-1785	3051732-0-3051732	92392	WHEEL ASSEMBLY	EA	4
C 116	2	PAOZZ	2640-060-3550	3051731-2	92392	CAP, VALVE	EA	4

(1) ILLUSTRATION (a) FIG NO.	(1) ILLUSTRATION (b) ITEM NO.	(2) SMR CODE	(3) NATIONAL STOCK NUMBER	(4) PART NUMBER	(5) FSCM	(6) DESCRIPTION USABLE ON CODE	(7) U/M	(8) QTY INC IN UNIT
116	3	PAOZZ	4730-00-111-2519	520904	00000	ADAPTER: VALVE TO CAP	EA	4
116	4	PAOZZ	2640-00-555-2827	MS51373-1	96906	VALVE ASSEMBLY	EA	4
116	5	PAOZZ	2530-00-111-6473	RA26561-2	73195	WHEEL	EA	4
116	6	PCOZZ	5330-00-972-8204	OR25T	73195	RING, SEAL	EA	4
116	7	PAOZZ	5340-00-110-5700	SR346TU5	73195	RING, SIDE	EA	4
116	8	PAOZZ	5340-00-110-5701	3038768-2	89926	RING, LOCK	EA	4
116		PAOZZ	2640-00-240-2062	6000	53477	CORE, VALVE	EA	4
116	9	PCOZZ	2610-00-726-5164			TIRE, PNEUMATIC, TUBELESS: 17.5 X 25, 12 PLY	EA	4
						GROUP 32 - BRAKE SYSTEM		
117	1	XBOZZ		3006769-8	92392	CLAMP, TUBE: BRAKE LINE	EA	6
117	2	PAOZZ	4710-00-115-0495	3052046-4	92392	TUBE: TEE TO POWER CLUSTER	EA	1
117	3	PAOZZ	4730-00-287-1707	702X4	79740	TEE: BRAKE LINE	EA	1
117	4	PAOZZ	4710-00-168-1862	3050380-9	92392	TUBE ASSEMBLY: TEE TO CYLINDER	EA	1
117	5	MOOOO		3050362-7	92392	TUBE: POWER CLUSTER TO TREADLE VALVE MANUFACTURE FROM:	EA	1
117		PCOZZ				TUBE, AS REQUIRED	RL	
117		PAOZZ				NUT, 2 REQUIRED	EA	
117		PAOZZ	4730-00-278-8767			SLEEVE, 2 REQUIRED	EA	
117	6	PAOZZ	4730-00-278-8886	919982-9	92392	UNION, PIPE: BRAKE LINE	EA	3
117	7	MOOOO		2050363-5	92392	TUBE: POWER CLUSTER TO TREADLE VALVE MANUFACTURE FROM:	EA	1
117		PCOZZ	4710-00-278-5619			TUBE, AS REQUIRED	RL	
117		PAOZZ	4730-00-278-8767			SLEEVE, 2 REQUIRED	EA	
117		PAOZZ	4730-00-278-1543			NUT, 2 REQUIRED	EA	
117	8	PAOZZ	4730-00-278-3828	69X8	79470	ELBOW, PIPE: TUBE TO POWER CLUSTER	EA	2
117	9	PAOZZ	4710-00-115-0494	3050379-1	92392	TUBE ASSEMBLY, POWER CLUSTER TO TEE	EA	1
117	10	PAOZZ	5310-00-809-3078	MS27183-11	96906	WASHER, LOCK: TUBE CLAMP	EA	2
117	11	PAOZZ	5310-00-656-0227	913177-2	92392	NUT, PLAIN, HEXAGON: TUBE CLAMP MTG	EA	2
117	12	PAOZZ	5310-00-275-6635	2006797-7	92392	WASHER: INNER, FITTING	EA	2
117	13	PAOZZ	4730-00-403-0885	3006806-8	92392	FITTING, HYDRAULIC LINE	EA	1
117	14	PAOZZ		3006799-5	92392	WASHER: OUTER, FITTING	EA	1
117	15	PAOZZ	4730-00-489-5799	3007115-3	92392	FITTING: HYDRAULIC FITTING BOLT	EA	1
117	16	PAOHH	2530-00-133-9970	AC70128	17460	CLUSTER ASSEMBLY, POWER, FRONT	EA	1
118	1	PAFHH	2530-00-630-0058	AE834	17460	CYLINDER ASSEMBLY, AIR	EA	1
118	2	XBHZZ		AC2868	17460	SHELL, CYLINDER	EA	1
118	3	PAHZZ	5310-00-010-3320	MS35338-7	96906	WASHER, LOCK: SHELL MTG	EA	8
118	4	PAHZZ	5306-00-225-8496	MS90725-31	96906	SCREW, CAP, HEXAGON HEAD: SHELL MTG, 5/16 IN. NC SIZE 5/8 IN. LG	EA	8
118	5	KFHZZ		AD1778	17460	SEAL: PISTON (PART OF KIT, NSN 2530-00-507-6394)	EA	1
118	6	KFHZZ		AC2837	17460	WIPER, PISTON (PART OF KIT, NSN 2530-00-507-6394)	EA	1
118	7	XBHZZ		AC2828	17460	ROD, PISTON		

ILLUSTRATION (a) FIG NO.	(b) ITEM NO.	SMR CODE	NATIONAL STOCK NUMBER	PART NUMBER	FSCM	DESCRIPTION USABLE ON CODE	U/M	QTY INC IN UNIT
118	8	KFHZZ		AC2003	17460	BOOT, PISTON (PART OF KIT, NSN 2520-00-507-6394)	EA	1
118	9	XBHZZ		AD1931	17460	SPRING, PISTON RETURN	EA	1
118	10	PAHZZ	5310-00-637-9541	MS35338-46	96906	WASHER, LOCK: COVER MTG	EA	3
C 118	11	PAHZZ	5305-00-269-3214	MS90725-64	96906	SCREW, CAP, HEXAGON HEAD: COVER MTG	EA	2
118	12	XBHZZ		901826-8	92392	BUSHING, REDUCER	EA	1
118	13	XBHZZ		AC2834	17460	INDICATOR	EA	1
118	14	XBHZZ		AC2020	17460	HEAD ASSEMBLY, CYLINDER	EA	1
118	15	PAFZZ	2530-00-133-9968	AC43886	17460	RETAINER	EA	1
118	16	PAFZZ	4730-00-614-0205	AC2009	17460	SCREEN	EA	2
118	17	PAFZZ	2530-00-133-9969	AC43887	17460	FILTER	EA	1
118	18	PAFHH	2530-00-558-5588	FL677	17460	CYLINDER ASSEMBLY, HYDRAULIC	EA	1
118	19	XBOZZ		FC18299	17460	PLUG: FILL	EA	1
118	20	PAOZZ	5330-00-291-4645	FC5922	17460	GASKET: FILL PLUG	EA	1
118	21	XAHZZ		FD2704	17460	HOUSING, CYLINDER	EA	1
118	22	KFHZZ		FC14426	17460	VALVE, CHECK (PART OF KIT, NSN 2530-00-507-6394)	EA	1
118	23	XBHZZ		FC1318	17460	SPRING: PISTON	EA	1
118	24	XAHZZ		FD1387	17460	CUP, PISTON, SECONDARY	EA	1
118	25	KFHZZ		FC1338	17460	PISTON ASSEMBLY (PART OF KIT, NSN 2530-00-507-6394)	EA	1
118	26	KFHZZ		FD962	17460	CUP, PISTON, PRIMARY (PART OF KIT, NSN 2530-00-507-6394)	EA	1
118	27	XBHZZ		FC1321	17460	PLATE, PISTON	EA	1
118	28	XAHZZ		FC1330	17460	RING, LOCK: PISTON	EA	1
118	29	PAFZZ	5305-00-269-2803	MS90726-60	96906	SCREW, CAP, HEXAGON HEAD: CYLINDER MTG, 3/8-24 THD SIZE, 1 IN. LG	EA	4
118	30	XBFZZ		AE70242	17460	BRACKET: CYLINDER MTG	EA	1
118	31	PAFZZ	5310-00-637-9541	MS35338-46	96906	WASHER, LOCK: CYLINDER MTG	EA	4
118	32	PAFZZ	5310-00-543-5973	MS35691-625	96906	NUT, PLAIN, HEXAGON: CYLINDER MTG, 3/8-24 THD SIZE	EA	4
C 119		PAOHH	2530-00-970-3444	8017004	19207	CLUSTER ASSEMBLY, POWER, REAR	EA	1
119	1	PAFHH		AD833	17460	CYLINDER ASSEMBLY, AIR	EA	1
119	2	XBHZZ		AC2869	17460	SHELL, CYLINDER	EA	1
119	3	PAHZZ	5310-00-010-3320	MS35338-7	96906	WASHER, LOCK: SHELL MTG	EA	8
119	4	PAHZZ	5306-00-225-8496	MS90725-31	96906	SCREW, CAP, HEXAGON HEAD: SHELL MTG	EA	8
119	5	KFHZZ		AD1779	17460	SEAL, PISTON (PART OF KIT, NSN 2530-00-970-3443)	EA	1
119	6	KFHZZ		AC2836	17460	WIPER, PISTON (PART OF KIT, NSN 2530-00-970-3443)	EA	1
119	7	XBHZZ		AC2826	17460	ROD, PISTON	EA	1
119	8	KFHZZ		AC2003	17460	BOOT, PISTON (PART OF KIT, NSN 2530-00-970-3443)	EA	1
119	9	XBHZZ		AC2812	17460	SPRING, PISTON RETURN	EA	1
119	10	PAHZZ	5310-00-637-9541	MS35338-46	96906	WASHER, LOCK: HEAD AND INDICATOR MTG	EA	1
119	11	PAHZZ	5305-00-021-3741	213741	00000	SCREW, CAP, HEXAGON HEAD MTG, 3/8-16 THD SIZE, 1 3/4 IN. LG	EA	1
119	12	XBHZZ		901826-8	92392	BUSHING, REDUCER	EA	1

	(1) ILLUSTRATION (a) FIG NO.	(b) ITEM NO.	(2) SMR CODE	(3) FEDERAL STOCK NUMBER	(4) PART NUMBER	(5) FSCM	(6) DESCRIPTION USABLE ON CO
C	119	13	XBHZZ		AC2834	17460	INDICATOR
C	119	14	XBHZZ		AC2019	17460	HEAD ASSEMBLY, CYLINDER
C	119	15	PAFZZ	2530-133-9968	AC43886	17460	RETAINER
C	119	16	PAFZZ	4730-614-0205	AC2009	17460	SCREEN
C	119	17	PAFZZ	2530-133-9969	AC43887	17460	FILTER
C	119	18	PAFHH	2530-715-7658	FE1310	17460	CYLINDER ASSEMBLY, HYDRAULIC
C	119	19	XBOZZ		FC18299	17460	PLUG, FILL
C	119	20	PAOZZ	5330-291-4645	FC5922	17460	GASKET: FILL PLUG
C	119	21	XAHZZ		FD4570	17460	HOUSING, CYLINDER
C	119	22	KFHZZ		FC14425	17460	VALVE, CHECK (PART OF KIT, FSN 2530-970-3443)
C	119	23	XBHZZ		FC932	17460	SPRING, PISTON
C	119	24	XAHZZ		FD1311	17460	CUP, PISTON, PRIMARY (PART OF KIT, FSN 2520-970-3443)
C	119	25	KFHZZ		FC943	17460	PISTON ASSEMBLY (PART OF KIT, FSN 2530-970-3443)
C	119	26	KFHZZ		FD344	17460	CUP, PISTON, SECONDARY
C	119	27	XBHZZ		FC928	17460	PLATE, PISTON
C	119	28	XAHZZ		FC929	17460	RING, LOCK
C	119	29	PAFZZ	5305-269-2803	MS90726-60	96906	SCREW, CAP, HEXAGON HEAD: CYLINDER MTG, 24 X 1 IN.
C	119	30	XBFZZ		AE70242	17460	BRACKET: CYLINDER MTG
	119	31	PAFZZ	5310-637-9541	MS35338-46	96906	WASHER, LOCK: CYLINDER MTG, 3/8 IN.
C	119	32	PAFZZ	5310-543-5973	MS35691-625	96906	NUT, PLAIN, HEXAGON: CYLINDER MTG, 3/8-24 THD SIZE
C	120	1	XBOZZ		3051719-7	92392	TUBE ASSEMBLY: AIR SUPPLY, REAR
C	120	2	PAOZZ		68X4A	79470	CONNECTOR: AIR LINE
C	120	3	PAOZZ	2530-115-0235	3031668-1	92392	SWITCH, PRESSURE
C	120	4	PAOZZ	4730-289-2830	901825-0	92392	REDUCER, PIPE: SWITCH, 1/4 X 1/8 IN.
C	120	5	PAOZZ	4730-278-7778	901714-6	92392	CROSS, PIPE: AIR LINES
C	120	6	PAOZZ	4730-192-9450			NIPPLE, PIPE: AIR LINE, 1/4 X 1/4 X 7/8 IN.
C	120	7	PAOZZ	4730-278-2745	105417	00000	TEE, PIPE: AIR LINE
C	120	8	PAOZZ	4730-192-9450			NIPPLE, PIPE: AIR LINE, 1/4 X 1/4 X 7/8 IN.
C	120	9	PAOZZ	4310-452-9304	221154	06853	VALVE, SAFETY
C	120	10	PAOZZ	4730-278-3828	69X8	79470	ELBOW, PIPE: AIR LINE, 3/8 X 1/2 IN.
C	120	11	PAOZZ	2530-115-0233	3050286-8	92392	RESERVOIR, AIR
C	120	12	PAOZZ	4730-278-3828	69X8	79470	ELBOW, PIPE: AIR LINE, 3/8 X 1/2 IN.
C	120	13	MOOOO		3050357-7	92392	TUBE: AIR LINE MANUFACTURE FROM:
	120		PAOZZ	4730-278-8767			SLEEVE, 2 REQUIRED
	120		PAOZZ	4730-287-1543			NUT, 2 REQUIRED
	120		PCOZZ	4710-278-5619			TUBING, AS REQUIRED
C	120	14	XBOZZ	5340-133-3660	3037049-8	92392	CLAMP: TANK MTG
C	120	15	PAOZZ		MS20364-524A	96906	NUT, SELF-LOCKING, HEXAGON: CLAMP MTG, 5/16-24 THD SIZE
C	120	16	PAOZZ		MS15795-12	96906	WASHER, FLAT: CLAMP MTG, 5/16 IN. DIA
C	120	17	PAOZZ	5310-012-0368	MS35690-525	96906	NUT, PLAIN, HEXAGON: CLAMP MTG, 5/16-24 THD SIZE

(1) ILLUSTRATION (a) FIG NO.	(b) ITEM NO.	(2) SMR CODE	(3) NATIONAL STOCK NUMBER	(4) PART NUMBER	(5) FSCM	(6) DESCRIPTION USABLE ON CODE	(7) U/M	(8) QTY INC IN UNIT
120	18	PAOZZ	5310-00-010-3320	MS35338-7	96906	WASHER, LOCK: CLAMP MTG, 5/16 IN. DIA	EA	6
120	19	PAOZZ	5306-00-225-9094	MS90726-39	96906	SCREW, CAP, HEXAGON HEAD: CLAMP MTG, 5/16-24 THD SIZE, 1 3/4 IN. LG	EA	2
120	20	XBOZZ		3048511-5	92392	CLAMP: AIR LINE	EA	1
120	21	MOOOO		3050356-9	92392	TUBE: AIR LINE MANUFACTURE FROM:	EA	1
120		PAOZZ	4730-00-278-8767			SLEEVE, 2 REQUIRED	EA	
120		PAOZZ	4730-00-287-1543			NUT, 2 REQUIRED	EA	
120		PCOZZ	4710-00-277-5529			TUBING, AS REQUIRED	RL	
120	22	PAOZZ	5306-00-225-9097	MS90726-42	96906	SCREW, CAP, HEXAGON HEAD: CLAMP MTG, 5/16-24 THD SIZE, 2 1/2 IN. LG	EA	2
120	23	PAOZZ	5306-00-225-9089	MS90726-34	96906	SCREW, CAP, HEXAGON HEAD: CLAMP MTG, 5/16-24 THD SIZE, 1 IN. LG	EA	4
120	24	PAOZZ	4730-00-278-3828	69X8	79470	ELBOW, PIPE: AIR LINE	EA	1
120	25	MOOOO		3050355-1	92392	TUBE: AIR LINE MANUFACTURE FROM:	EA	1
120		PAOZZ	4730-00-278-8767			SLEEVE, 2 REQUIRED	EA	
120		PAOZZ	4730-00-287-1543			NUT, 2 REQUIRED	EA	
120		PCOZZ	4710-00-277-5529			TUBING, AS REQUIRED	RL	
120	26	PAOZZ	4730-00-278-3828	69X8	79470	ELBOW, PIPE: AIR LINE	EA	2
120	27	PAOZZ	4820-00-133-9974	AC23540	63477	VALVE, CHECK	EA	2
120	28	PAOZZ		444171	00000	ELBOW, STREET PIPE TO LINE	EA	2
120	29	PAOZZ		914087-2	92392	TEE, PIPE: AIR LINE	EA	1
120	30	PAOZZ	4730-00-595-2628	68X8A	79470	CONNECTOR: AIR LINE	EA	2
120	31	PAOZZ		919503-3	92392	CONNECTOR: AIR LINE	EA	2
120	32	MOOOO		3050354-4	93292	TUBE: AIR LINE MANUFACTURE FROM:	EA	1
120		PAOZZ	4730-00-278-8767			SLEEVE, 2 REQUIRED	EA	
120		PAOZZ	4730-00-287-1543			NUT, 2 REQUIRED	EA	
120		PCOZZ	4710-00-277-5529			TUBING, AS REQUIRED	RL	
120	33	PAOZZ	4820-00-142-3036	215310	92392	COCK, DRAIN: AIR RECEIVER	EA	3
120	34	PAOZZ	4730-00-277-8266	69X4A	79470	ELBOW, PIPE: TEE TO AIR	EA	3
120	35	PCOZZ	4720-00-114-0986	7305097Z	25424	HOSE, SPECIAL: TANK TO SUPPLY VALVE	EA	1
120	36	PAOZZ		68X4A	79470	CONNECTOR, TUBE: AIR LINE, 1/4 IN.	EA	1
120	37	PAOZZ	2530-00-691-1233	224296	06853	VALVE, AIR SUPPLY	EA	1
120	38	PAOZZ	5305-00-267-8974	MS90726-8	96906	SCREW, CAP, HEXAGON HEAD: VALVE MTG, 1/4-28 THD SIZE, 1 IN. LG	EA	2
120	39	PCOZZ	4720-00-115-0234	3050973-1	92392	HOSE ASSEMBLY, GOVERNOR TO AIR SUPPLY VALVE	EA	1
120	40	XBOZZ	5340-00-720-6213	TC16	75272	CLAMP, LOOP: AIR LINE	EA	1
120	41	PCOZZ	4720-00-114-0987	3050295-9	92392	HOSE ASSEMBLY, TANK TO COMPRESSOR	EA	1
120	42	PAOZZ		MS35337-25	96906	WASHER, LOCK: VALVE MTG, 1/4 IN. DIA	EA	2
120	43	PAOZZ	5310-00-012-0367	MS35690-425	96906	NUT, PLAIN, HEXAGON: VALVE MTG, 1/4-28 THD SIZE	EA	2
120	44	PAOZZ		675X185	06853	CHECK VALVE: AIR LINE	EA	1
120	45	PAOZZ		917391-5	92392	TEE, PIPE: AIR LINE	EA	1
120	46	PAOZZ	4730-00-196-1465	8743067	00000	NIPPLE, PIPE: AIR LINE	EA	1
120	47	PAOZZ	4730-00-279-0137	5141	76894	BUSHING, REDUCER: AIR LINE, 1/2 X 1/8 IN.	EA	1

(1) ILLUSTRATION (a) FIG NO.	(b) ITEM NO.	(2) SMR CODE	(3) FEDERAL STOCK NUMBER	(4) PART NUMBER	(5) FSCM	(6) DESCRIPTION USABLE ON CODE	(7) U/M	(8) QTY INC IN UNIT
121	1	PAOZZ	4710-115-0503	3051025-9	92392	TUBE: AIR LINE	EA	1
121	2	PAOZZ	4710-408-4593	3053227-1	92392	TUBE: AIR LINE	EA	1
121	3	PAOZZ	4730-263-4576	69X2	79470	ELBOW, PIPE: TUBE TO VALVE	EA	1
121	4	PAOZZ	5310-012-0367	MS35690-425	96906	NUT, PLAIN, HEXAGON: ALCOHOL DISPENSER MTG, 1/4-28 THD SIZE	EA	3
121	5	PAOZZ	5310-010-3319	MS35338-6	96906	WASHER, LOCK: ALCOHOL DISPENSER MTG, 1/4 IN. ID	EA	3
121	6	PAOZZ	5305-267-8977	MS90726-10	96906	SCREW, CAP, HEXAGON HEAD: ALCOHOL DISPENSER MTG, 1/4-28 THD SIZE, 1 1/4 IN. LG	EA	3
121	7	PAOZZ	2530-133-9971	3051030-9	92392	EVAPORATOR, ALCOHOL	EA	1
122	1	PAOZZ	4710-143-8993	3042839-5	92392	TUBE ASSEMBLY: FRONT BRAKE, RIGHT SIDE	EA	1
122	2	PAOZZ		3042836-1	92392	TUBE ASSEMBLY: FRONT BRAKE, TEE TO UNION	EA	1
122	3	PCOZZ	4720-115-0497	3043197-7	92392	HOSE ASSEMBLY: TO BRAKE, TUBE	EA	1
122	4	PAOZZ	4710-115-0496	3050814-7	92392	TUBE ASSEMBLY: HOSE TO TEE	EA	1
122	5	PAOZZ		3045907-7	92392	TUBE ASSEMBLY: TO RIGHT HAND WHEEL CYLINDER, REAR	EA	1
122	6	PAOZZ		3045908-5	92392	HOSE ASSEMBLY, TUBE TO TEE, REAR AXLE	EA	1
122	7	PAOZZ	4730-287-1707	922248-0	92392	TEE, TUBE: AXLE BRAKE LINES	EA	2
122	8	PAOZZ	4710-143-8992	3045906-9	92392	TUBE ASSEMBLY: TEE TO LEFT WHEEL CYLINDER, REAR	EA	1
122	9	PAOZZ	4710-115-0499	3050376-7	92392	TUBE ASSEMBLY: ELBOW TO CLUTCH CUTOFF VALVE	EA	1
122	10	PAOZZ	4710-115-0501	3050377-5	92392	TUBE ASSEMBLY: CONNECTOR TO CUTOFF VALVE	EA	2
122	11	PAOZZ	4730-277-8273	47W14X1-8	30327	ELBOW, TUBE: TUBE TO TUBE	EA	2
122	12	PAOZZ	4710-115-0502	3050378-3	92392	TUBE ASSEMBLY: ELBOW TO TRANSMISSION	EA	1
122	13	PAOZZ	4710-143-8991	3042838-7	92392	TUBE ASSEMBLY: FRONT BRAKE, LEFT SIDE	EA	1
122	14	XBOZZ		3041159-6	92392	BRACKET	EA	1
122	15	XBOZZ		3028787-4	92392	CLIP, TUBE	EA	2
122		PAOZZ		3050815	92392	TUBE ASSEMBLY: TEE TO HOSE	EA	1
123	1	PAFFF	3805-733-3405	3050A	93784	VALVE ASSEMBLY, CLUTCH CUTOFF	EA	1
123	2	XAFZZ		3053A	93784	CAM ASSEMBLY, LEVER	EA	1
123	3	PAFZZ	5330-115-1455	3058	93784	RETAINER, PACKING	EA	2
123	4	PCFZZ	5330-115-1454	923663-9	92392	PACKING, PREFORMED	EA	2
123	6	XAFZZ		3052	93784	VALVE, FOLLOWER	EA	1
123	7	XAFZZ		3051	93784	PLUNGER, VALVE	EA	1
123	8	PAFZZ		3034	93784	SPRING: PLUNGER	EA	1
123	9	XBFZZ		907856-9	92392	PLUG, PIPE: PLUNGER	EA	1
123	10	PAFZZ		910251-8	92392	NUT, PLAIN, HEXAGON: VALVE MTG	EA	3
123	11	PAFZZ	5310-010-3319	MS35337-6	96906	WASHER, LOCK: VALVE MTG	EA	3
123	12	PAFZZ		3012488-7	92392	SCREW, CAP: VALVE MTG	EA	3
124	1	PAOZZ	5305-269-2801	MS90726-58	96906	SCREW, CAP, HEXAGON HEAD: PEDAL TO ROD, 3/8-24 THD SIZE, 3/4 IN. LG	EA	4
124	2	PAOZZ	5310-637-9541	MS35338-46	96906	WASHER, LOCK: PEDAL TO ROD	EA	4
124	3	PAOZZ	5310-543-5973	MS35691-625	96906	NUT, PLAIN, HEXAGON: PEDAL TO ROD, 3/8-24 THD SIZE	EA	4
124	4	XBOZZ	2530-233-7799	3050399-9	92392	ROD: PEDAL CONNECTING	EA	1
124	5	PAOZZ	5306-225-9089	MS90726-34	96906	SCREW, CAP, HEXAGON HEAD: FLANGE MTG, 5/16-24 THD SIZE, 1 IN. LG	EA	3
124	6	PAOZZ	5310-010-3320	MS35338-7	96906	WASHER, LOCK: FLANGE MTG, 5/16 IN.	EA	3

ILLUSTRATION (a) FIG NO.	(b) ITEM NO.	SMR CODE	NATIONAL STOCK NUMBER	PART NUMBER	FSCM	DESCRIPTION USABLE ON CODE	U/M	QTY INC IN UNIT
24	7	PAOZZ	5310-00-012-0368	MS35690-525	96906	NUT, PLAIN, HEXAGON: FLANGE MTG, 5/16-24 THD SIZE	EA	3
24	8	XBOZZ	2530-00-189-4962	3047506-5	92392	PEDAL ASSEMBLY: TREADLE VALVE CONNECTING	EA	1
24	9	XAOZZ		AC42171	63477	FLANGE	EA	1
24	10	PAOZZ	5315-00-115-1488	AC31768	63477	PIN, STRAIGHT, HEADLESS: PEDAL MTG	EA	2
24	11	PAOZZ		MS24665-303	96906	PIN, COTTER, PEDAL PIN	EA	4
24	12	XBOZZ		AD48382	63477	PEDAL, CONTROL	EA	1
25		PAOHH		3047507-3	92392	VALVE, ASSEMBLY, AIR APPLICATION	EA	1
25	1	XABHH		AE48365	63477	HOUSING, UPPER	EA	1
25	2	PAHZZ	5340-00-115-1422	AC39876	63477	SPRING: PRIMARY PISTON RETURN	EA	1
25	3	PAHHH	2530-00-115-0240	AC48361	63477	PISTON ASSEMBLY	EA	1
25	4	XABZZ		AC48362	63477	PISTON	EA	1
25	5	KFHZZ		AC31706	63477	PACKING, PREFORMED PISTON (PART OF KIT, NSN 4820-00-112-0075)	EA	1
25	6	XAHZZ		AC45267	63477	SPRING, METERING	EA	1
25	7	XAHZZ		AC39875	63477	RETAINER, SPRING	EA	1
25	8	XAHZZ		AC39878	63477	RING, RETAINING	EA	1
25	9	XAHZZ		AC45269	63477	RETAINER, SPRING	EA	1
25	10	XBFZZ		AC42171	63477	FLANGE, PEDAL MTG	EA	1
25	11	PAFZZ	5305-00-978-9381	MS16997-63	96906	SCREW, CAP, SOCKET HEAD: PEDAL STOP	EA	1
25	12	PAFZZ		MS35690-405	96906	NUT, PLAIN, HEXAGON: PEDAL STOP	EA	1
25	13	PAHZZ	2530-00-115-0238	AC49590	63477	PLUNGER	EA	1
25	14	KFHZZ		AC31769	63477	BOOT, PLUNGER (PART OF KIT, NSN 4820-00-112-0075)	EA	1
25	15	XBOZZ		AD48382	63477	PEDAL, CONTROL	EA	1
25	16	XBOZZ		AC31768	63477	PIN, STRAIGHT, HEADLESS: PEDAL MTG	EA	2
25	17	XBOZZ	2530-00-115-0237	AC42170	63477	ROLLER	EA	1
25	18	PAOZZ	5315-00-236-8353	MS24665-306	96906	PIN, COTTER: PEDAL MTG	EA	4
25	19	PAFZZ	5305-00-059-4550	MS35241-34	96906	SCREW, MACHINE: FLANGE MTG, 6/32 X 5/6 IN.	EA	1
25	20	KFHZZ	4820-00-738-6945	AC37438	63477	VALVE, INLET (PART OF KIT, NSN 4820-00-738-6945)	EA	1
25	21	PAHZZ	4820-00-738-6942	AC37448	63477	SPRING, VALVE	EA	1
25	22	KFHZZ		AC37453	63477	PACKING, PREFORMED: VALVE GUIDE (PART OF KIT, NSN 4820-00-112-0075)	EA	1
25	23	KFHZZ	4820-00-738-6936	AC37455	63477	SEAL: VALVE GUIDE (PART OF KIT, NSN 4820-00-112-0075)	EA	1
25	24	XBHZZ	4820-00-738-6938	AC37454	63477	GUIDE VALVE	EA	1
25	25	XBHZZ		AC48377	63477	ROD, PUSH	EA	1
25	26	KFMZZ	5330-00-738-6935	AC24212	63477	PACKING, PREFORMED (PART OF KIT, NSN 4820-00-112-0075)	EA	1
25	27	KFHZZ		AC48378	63477	SEAL: COVER (PART OF KIT, NSN 4820-00-112-0075)	EA	1
25	28	XAHZZ		AC48367	63477	COVER: BODY	EA	1
25	29	KFHZZ		FC15278	63477	PACKING, PREFORMED: PISTON (PART OF KIT, NSN 4820-00-112-0075)	EA	1
25	30	KFHZZ		AC48379	63477	PACKING, PREFORMED: PISTON (PART OF KIT, NSN 4820-00-112-0075)	EA	1

(1) ILLUSTRATION (a) FIG NO.	(b) ITEM NO.	(2) SMR CODE	(3) NATIONAL STOCK NUMBER	(4) PART NUMBER	(5) FSCM	(6) DESCRIPTION USABLE ON CODE	(7) U/M	(8) QTY INC IN UNIT
125	31	XAHZZ		AC48368	63477	PISTON, SECONDARY	EA	1
125	32	PAHZZ	5340-00-115-1423	AC48276	63477	SPRING, RETURN: PISTON	EA	1
125	33	XABZZ		AD48366	63477	HOUSING, LOWER	EA	1
125	34	KFHZZ		AC48363	63477	VALVE, INLET (PART OF KIT, NSN 4820-00-112-0076)	EA	1
125	35	PAHZZ	5340-00-115-1424	AC48375	63477	SPRING, RETURN, PISTON	EA	1
125	36	XAHZZ		AC48369	63477	GUIDE, SPRING	EA	1
125	37	KFHZZ	5330-00-071-8958	AC48373	63477	SEAL, GUIDE (PART OF KIT, FSN 4820-112-0076)	EA	1
125	38	KFHZZ		AC48374	63477	SEAL, RETAINER (PART OF KIT, FSN 4820-112-0076)	EA	1
125	39	XAHZZ		AC48371	63477	RETAINER, SEAL	EA	1
125	40	XAHZZ		AC48372	63477	SHIELD: EXHAUST	EA	1
125	41	XAHZZ		FC24198	63477	RING, RETAINER: EXHAUST SHIELD	EA	1
125	42	PAFZZ	5310-00-010-3319	MS35338-6	96906	WASHER, LOCK: UPPER HOUSING TO LOWER HOUSING	EA	4
125	43	PAFZZ	5305-00-225-3840	MS90725-7	96906	SCREW, CAP, HEXAGON HEAD: UPPER HOUSING TO LOWER HOUSING, 1/4-20 THD SIZE, 7/8 IN.	EA	4
125		PAFZZ	4820-00-115-0239	AC48370	63477	VALVE ASSEMBLY	EA	1
125	44	PAFZZ	5310-00-012-0368	MS35690-525	96906	NUT, PLAIN, HEXAGON: VALVE MTG	EA	3
125	45	PAFZZ	5310-00-010-3320	MS35338-7	96906	WASHER, LOCK: VALVE MTG	EA	3
125	46	PAFZZ	5306-00-225-9089	MS90726-34	96906	SCREW, CAP, HEXAGON HEAD: VALVE MTG	EA	4
126	1	PAFZZ	5360-00-841-9034	2258T124	78500	SPRING: SHOE RETURN	EA	2
126	2	PAFZZ	2530-00-371-4144	1229M221	78500	RING, RETAINING: ANCHOR PIN STRAP	EA	8
126	3	XBFZZ		1845J36	79780	STRAP, ANCHOR PIN	EA	2
126	4	PAFFF	2530-00-110-9605	A33-3222-U-957	79780	SHOE ASSEMBLY, FRONT	EA	4
126	5	XBFZZ	2530-00-378-7701	FC1408	17460	CAM: SHOE ADJUSTING	EA	2
126	6	PAFZZ	5360-00-897-3433	2258S123	79780	SPRING: SHOE ADJUSTING CAM	EA	2
126	7	PAFZZ	2530-00-563-4391	1229H216	79780	RING, RETAINING: BRAKE SHOE	EA	4
126	8	PAFZZ		1229N222	78500	WASHER, FLAT: BRAKE SHOE	EA	8
126	9	PAFZZ	5310-00-205-9120	1229J218	78500	WASHER, SPACER: BRAKE SHOE	EA	24
126	10	XBFZZ	5315-00-010-8433	1246F84	79780	PIN, STRAIGHT: CAM STOPPING	EA	2
126	11	XBFZZ	2530-00-194-4369	1846Y282	79780	PIN, GUIDE: BRAKE SHOE	EA	4
126	12	PAFZZ	2520-00-058-2870	A3911A313	79780	SPIDER ASSEMBLY, BRAKE SHOE	EA	2
126	13	PAFZZ	5315-00-842-8203	A2297S97	79780	PIN ASSEMBLY, SHOE ADJUSTING	EA	2
126	14	PAFZZ	5330-00-798-7553	5X583	79780	SEAL, FELT: SPIDER TO DRUM	EA	2
126	15	PAFZZ	5310-00-111-0801	1827B236	79780	NUT, PLAIN, HEXAGON: SPIDER MTG, 5/8-18 THD SIZE	EA	28
126	17	PAFZZ	5365-00-897-3434	1854Z286	78500	RING, RETAINING: ANCHOR PIN	EA	2
126	18	PAFZZ	5305-00-726-2557	MS90727-170	96906	SCREW, CAP, HEXAGON HEAD: SPIDER MTG, 5/8-18 THD SIZE, 3 1/2 IN. LG	EA	26
126	19	PAFZZ	5315-00-930-4944	1859E83	79780	PIN, ANCHOR	EA	2
126	20	PAFZZ	3120-00-740-9567	1225P94	79780	BUSHING, ANCHOR PIN	EA	2
126	21	PAFZZ	5305-00-726-2558	MS90727-171	96906	SCREW, CAP, HEXAGON HEAD: SPIDER MTG, 5/8-18 THD SIZE, 3 3/4 IN. LG	EA	3
127	1	PAFZZ	5365-00-205-4671	2858Y282	78500	SPRING: BRAKE SHOE RETURN	EA	2
127	2	PAFZZ	2530-00-371-4144	1229M221	78500	RING, RETAINING: ANCHOR PIN STRAP	EA	4
127	3	XBFZZ		1845E31	79780	STRAP, ANCHOR PIN	EA	2

ILLUSTRATION (a) FIG NO.	(b) ITEM NO.	SMR CODE	NATIONAL STOCK NUMBER	PART NUMBER	FSCM	DESCRIPTION USABLE ON CODE	U/M	QTY INC IN UNIT
127	4	PAFFF	2530-00-110-9606	A20-3822854	79780	SHOE ASSEMBLY, REAR BRAKE (INCLUDES COMPONENT OF KIT, P/N 2000-Q-953 (78500))	EA	4
127	5	XBFZZ	2530-00-457-1676	2847R200	79780	CAM, ADJUSTING, SHOE	EA	4
127	6	PAFZZ	2530-00-292-3004	285BA27	79780	SPRING: SHOE ADJUSTING CAM	EA	4
127	7	PAFZZ	5315-00-592-6079	1829L194	78500	RING, RETAINING: BRAKE SHOE PIN	EA	4
127	8	PAFZZ		1829P198	78500	WASHER: BRAKE SHOE PIN	EA	6
127	9	XBFZZ		1846Y360	79780	PIN, GUIDE: BRAKE SHOE	EA	4
127	10	PAFZZ	2530-00-133-9975	A3911H346	79780	SPIDER ASSEMBLY, REAR BRAKE	EA	2
127	11	PAFZZ	5306-00-701-3050	2847G137	78500	BOLT, ADJUSTING: BRAKE SHOE	EA	4
127	13	PAFZZ		18278236	79780	NUT, PLAIN, HEXAGON: SPIDER MTG, 5/8-18 THD SIZE	EA	24
127	14	PAFZZ	5330-00-110-8756	5X588	79780	SEAL, FELT: SPIDER	EA	2
127	15	PAFZZ	5365-00-358-9942	1229Y1299	78500	RING, RETAINING: ANCHOR PIN	EA	4
127	16	PAFZZ		1859C107	79780	PIN, ANCHOR: BRAKE SHOE	EA	4
127	17	PAFZZ	5305-00-726-2556	S11026-1	79780	SCREW, CAP, HEXAGON HEAD: SPIDER MTG	EA	24
127	18	PAFZZ		1829N196	78500	WASHER, FLAT: ADJUSTING CAM	EA	2
128	1	XBFZZ		AC119V749	63477	LINK ASSEMBLY, FRONT CYLINDER	EA	4
128	1	XBFZZ		A1199V749	02397	ROD, PUSH: REAR CYLINDER	EA	4
128	2	PAFZZ	5310-00-209-1761	FC603	63477	WASHER, COPPER: BLEEDER VALVE	EA	4
128	3	PAFZZ	2530-00-696-2998	FC11438	63477	BLEEDER VALVE, HYDRAULIC BRAKE, REAR AXLE	EA	2
128	4	PAFZZ	4730-00-274-5601	FC1030	63477	BOLT, BLEEDER VALVE	EA	4
128	5	PAFZZ	5310-00-637-9541	MS35338-46	96906	WASHER, LOCK: CYLINDER MTG	EA	8
128	6	PAFZZ		S269-1	78500	SCREW, CAP, HEXAGON HEAD: REAR CYLINDER MTG, 3/8-16 THD SIZE, 1 1/8 IN.	EA	4
128	6	PAFZZ		S268-1	79780	SCREW, CAP, HEXAGON HEAD: FRONT CYLINDER MTG	EA	4
128	7	PAFZZ	4730-00-396-2962	FC3354	63477	CONNECTOR, INLET: HYDRAULIC CYLINDER	EA	4
128	8	PAFZZ	2530-00-466-8624	FC602	63477	WASHER: INLET CONNECTOR	EA	4
128	9	PAFFF	2530-00-288-6169	3021892-9	92392	CYLINDER ASSEMBLY, REAR	EA	2
129	1	KFFZZ		A282748	00000	BOOT, DUST (PART OF KIT, NSN 2530-00-920-6792)	EA	4
129	2	XAFZZ		5214978	00000	PISTON	EA	4
129	3	KFFZZ		5214979	00000	CUP (PART OF KIT, FSN 2530-920-6792)	EA	4
129	4	XAFZZ	2530-00-288-6169	FD682	63477	HOUSING, CYLINDER	EA	2
129	5	XAFZZ		5214980	00000	SPRING	EA	2
130		PAFFF	2530-00-353-3038	FD6630	63477	CYLINDER ASSEMBLY, FRONT	EA	2
130	1	KFFZZ		FC6980	63477	BOOT, DUST (PART OF KIT, NSN 2530-00-507-6401)	EA	4
130	2	XAFZZ	2530-00-529-2883	FD1237	63477	PISTON	EA	4
130	3	KFFZZ	2530-00-696-0647	FD2230	63477	CUP (PART OF KIT, NSN 2530-00-507-6401)	EA	4
130	4	XAFZZ		FC3208	63477	SPRING	BA	2
		PAFZZ		2051854	92392	BLEEDER VALVE, HYDRAULIC BRAKE, FRONT AXLE	EA	1
		PAOZZ	5930-00-126-1159	229848	06853	SWITCH, STOP LIGHT	EA	1
		PAOZZ		11083-8X1-4	30327	BUSHING, PIPE: STOP LIGHT SWITCH	EA	1

(1) ILLUSTRATION (a) FIG NO.	(b) ITEM NO.	(2) SMR CODE	(3) NATIONAL STOCK NUMBER	(4) PART NUMBER	(5) FSCM	(6) DESCRIPTION USABLE ON CODE	(7) U/M	(8) QTY INC IN UNIT
118		PCHZZ	2530-00-507-6394	AC30750	17460	KIT, REPAIR, POWER CLUSTER: FRONT, 6 IN. (CONSISTS OF)	EA	1
118	5					1-SEAL		
118	6					1-WIPER		
118	8					1-BOOT		
118	22					1-VALVE		
118	25					1-PISTON ASSEMBLY		
118	26					1-cup		
119	1	PCHZZ	2530-00-970-3443	AC3074	17460	KIT, REPAIR, POWER, CLUSTER: REAR, 5 IN. (CONSISTS OF)	EA	1
119	5					1-SEAL		
119	6					1-WIPER		
119	8					1-BOOT		
119	22					1-VALVE		
119	25					1-PISTON ASSEMBLY		
119	26					1-CUP		
119		PCHZZ	2530-00-980-2375	FC33245	17460	KIT, REPAIR, CYLINDER, MASTER: FRONT (CONSISTS OF)	EA	1
119	22					1-VALVE		
119	25					1-PISTON ASSEMBLY		
119	26					1-CUP		
119	28					1-RING		
125		PCHFF	4820-00-112-0075	AC39213	63477	KIT, REPAIR, VALVE (CONSISTS OF)	EA	1
125	5					1-PACKING		
125	14					1-BOOT		
125	20					1-VALVE		
125	22					1-PACKING		
125	23					1-SEAL		
125	26					1-PACKING		
125	27					1-SEAL		
125	29					1-PACKING		
125	30					1-PACKING		
125	34					1-VALVE		
125	37					1-SEAL		
125	38					1-SEAL		
126		PAFZZ	2530-00-111-2517	2000D550	79780	KIT, BRAKE, LINING, FRONT (CONSISTS OF)	EA	4
126						4-LINING		
126		PAFZZ	5320-00-058-9885	MS16536-176	96906	72-RIVET	EA	25
127		PAFZZ		2000-Q-953	78500	KIT, BRAKE, LINING, REAR (CONSISTS OF)	EA	4
127						4-LINING		
127		PAFZZ	5320-00-058-9883	MS16536-172	96906	68-RIVET	EA	25

(a) FIG NO.	(b) ITEM NO.	SMR CODE	NATIONAL STOCK NUMBER	PART NUMBER	FSCM	DESCRIPTION USABLE ON CODE	U/M	QTY ING IN UNIT
129		PCFZZ	2530-00-920-6792	3021893-7	92392	KIT, REPAIR, WHEEL CYLINDER: REAR WHEEL (CONSISTS OF)	EA	1
129	1					1-BOOT		
129	3					2-CUP		
130		PCFZZ	2530-00-507-6401	FCB457	79780	KIT, REPAIR, WHEEL CYLINDER· FRONT WHEEL (CONSISTS OF)	EA	1
130	1					2-BOOT		
130	3					2-CUP		
						GROUP 33 - FRONT AND REAR AXLE		
131	1	PAFZZ	2510-00-111-5195	3036937-5	92392	PIN, AXLE MOUNTING	EA	2
131	2	PAFZZ	5310-00-984-8818	MS27183-32	96906	WASHER, FLAT: AXLE MTG	EA	2
131	3	PAFZZ		MS35690-2425	96906	NUT, SELF-LOCKING, HEXAGON: AXLE MTG	EA	2
131	4	PAFFF	2520-00-027-1004	3050B93-1	92392	AXLE ASSEMBLY, FRONT	EA	1
132	1	PAOZZ	4730-00-044-4655	444655	24617	PLUG, PIPE: PLANETARY COVER	EA	2
132	2	PAFZZ	5306-00-143-3074	3X373	79780	SCREW, CAP, HEXAGON HEAD: PLANETARY COVER MTG	EA	16
132	3	XBFZZ		3855B236	79780	COVER, GEAR: PLANETARY	EA	2
132	4	XBFZZ	2010-00-966-4463	1898B2626	78500	BUTTON, THRUST	EA	2
132	5	PCFZZ	5330-00-896-9727	2808S877	78500	GASKET: PLANETARY COVER	EA	2
132	6	PAFZZ	3040-00-756-7965	3880W933	78500	GEARSHAFT: PLANETARY GEAR	EA	6
132	7	PAFZZ	5310-00-754-2340	1829F708	78500	WASHER, THRUST: GEAR	EA	6
132	8	PAFZZ	3020-00-798-7542	3892H1542	78500	GEAR, SPUR: PLANETARY	EA	6
132	9	PAFZZ	3120-00-755-6715	1829X856	78500	WASHER, THRUST: GEAR	EA	6
132	10	PAFZZ	5305-00-022-7997	S2813-1	78500	SCREW, CAP, HEXAGON HEAD: SPIDER MTG	EA	32
132	11	PAFZZ	5310-00-010-3323	MS35338-10	96906	WASHER, LOCK: SPIDER MTG	EA	32
132	12	PAFZZ	2010-00-963-6897	3897S1527	78500	SPIDER: PLANETARY	EA	2
132	13	PCFZZ	5330-00-964-0096	5X594	78500	PACKING, PREFORMED: PLANETARY SPIDER	EA	2
132	14	PAOZZ	5310-00-594-8038	537801	00000	NUT, HEXAGON: WHEEL STUD, RH, 3/4-16 THD SIZE	EA	24
135	15	PAFZZ	5306-00-579-0463	20X262	78500	BOLT, SHOULDER: WHEEL STUD	EA	24
132	16	PAFZZ	2530-00-133-9976	3228236	79780	HUB ASSEMBLY, WHEEL	EA	2
132	17	PAOZZ	4730-00-111-2513	1250Z182A	78500	PLUG, PIPE, MAGNETIC: PLANETARY	EA	2
132	18	PAFZZ	2520-00-133-9947	3897R1578	79780	SPINDLE: PLANETARY	EA	2
132	19	PCFZZ	5330-00-110-8751	923590-4	92392	PACKING, PREFORMED: SPINDLE	EA	2
132	20	PAFZZ	2520-00-110-9603	3802F1436	79780	SHAFT, AXLE	EA	2
132	21	XBFZZ		3905A53	79780	DEFLECTOR DIRT	EA	2
132	22	PCFZZ		73022067	90940	OIL SEAL AND SLEEVE ASSEMBLY: AXLE SHAFT	EA	2
132	24	PAFZZ	3110-00-100-3621	52400	78500	CONE AND ROLLERS, TAPERED ROLLER BEARING	EA	2
132	25	PAFZZ	3110-00-100-0594	52618	78500	CUP, TAPERED ROLLER BEARING	EA	2
132	26	PAFZZ	5306-00-846-5699	10X659	78500	SCREW, CAP, HEXAGON HEAD: BRAKE DRUM MTG	EA	20
132	27	PAFZZ	2530-00-936-2212	3819C315	78500	DRUM, BRAKE, FRONT	EA	2

(1) ILLUSTRATION (a) FIG NO.	(b) ITEM NO.	(2) SMR CODE	(3) FEDERAL STOCK NUMBER	(4) PART NUMBER	(5) FSCM	(6) DESCRIPTION USABLE ON CODE	(7) U/M	(8) QTY INC IN UNIT
132	28	PAFZZ	5365-820-8064	18S4W257	78500	RING, RETAINING: GEAR MTG	EA	2
132	29	PAFZZ	2520-798-4688	3B92G1541	78500	GEAR, SPUR: DRIVE	EA	2
132	30	PAFZZ	5310-820-8059	1829E707	78500	WASHER, KEY: SUN GEAR	EA	2
132	31	PAFZZ	2530-978-9519	1898F760	79780	RETAINER, NUT	EA	4
132	32	PAFZZ	5310-964-0103	1827U229	78500	NUT, CASTELLATED, HEXAGON: PLANETARY SPIDER	EA	2
132	33	PAFZZ	2520-966-2528	3B92F1540	78500	GEAR, INTERNAL TEETH	EA	2
132	34	PAFZZ	3040-927-5650	3B97A1327	78500	HUB ASSEMBLY, GEAR	EA	2
132	35	PAFZZ	2010-966-4462	1820H60	78500	STRAP, LOCK: HUB ASSEMBLY MTG	EA	8
132	36	PAFZZ	5305-969-6017	S26601	78500	SCREW, CAP, HEXAGON HEAD: HUB ASSEMBLY MTG	EA	16
132	37	PAFZZ	110-100-3651	68462	78500	CONE AND ROLLERS, TAPERED ROLLER BEARING	EA	2
132	38	PAFZZ	3110-100-0612	68712	78500	CUP, TAPERED ROLLER BEARING	EA	2
133		PAFFF	2520-012-2058	A3200K765	79780	DIFFERENTIAL ASSEMBLY, FRONT AXLE	EA	1
133	1	PAFZZ	2520-018-3805	2814M65	78500	RING, ADJUSTING: BEARING	EA	2
133	2	PAFZZ	3110-100-0321	493	60038	CUP, TAPERED ROLLER BEARING	EA	2
133	3	PAFZZ	3110-100-0260	495	60038	CONE AND ROLLERS, TAPERED ROLLER BEARING	EA	2
133	4	PAFFF	2520-133-9953	A8-3235W777	79780	DIFFERENTIAL ASSEMBLY, FRONT AXLE	EA	1
133	5	PAFZZ	5306-115-6249	3042327-1	92392	BOLT, SPECIAL: DIFFERENTIAL	EA	8
133	6	XAFZZ		A3235W777	79780	CASE ASSEMBLY, DIFFERENTIAL	EA	1
133	7	PAFZZ		15X842	78500	BOLT, SPECIAL: DIFFERENTIAL	EA	4
133	8	PAFZZ	2520-913-0727	A35614	79780	GEAR ASSEMBLY, RING AND PINION	EA	1
133	9	XAFZZ		RV71016	79780	RIVET, SOLID: RING GEAR	EA	12
133	10	PAFZZ	3120-303-4977	1229H1022	78500	WASHER, THRUST: SUN GEAR	EA	2
133	11	PAFZZ	3020-798-7540	2234A469	78500	GEAR, BEVEL: SUN	EA	2
133	12	PAFZZ	2520-303-5074	3278F84	78500	SPIDER: DIFFERENTIAL	EA	1
133	13	PAFZZ	2520-798-7539	2233F448	78500	GEAR, BEVEL: PLANETARY	EA	4
133	14	PAFZZ	2520-798-4687	1229J1024	78500	WASHER, CONCAVE: PLANETARY GEAR	EA	4
133	15	PAFZZ	5310-021-8487	218487	00000	NUT, CASTELLATED, HEXAGON: CASE CLAMPING	EA	12
133	16	PAFZZ	5305-207-2226	10X382	78500	SETSCREW: ADJUSTING	EA	1
133	17	PAFZZ	5310-269-6493	13X41	78500	NUT, PLAIN, HEXAGON: ADJUSTING SCREW LOCK	EA	1
133	18	PAFZZ	2520-133-9954	A2-3200K765	78500	CARRIER ASSEMBLY, DIFFERENTIAL	EA	1
133	19	PAFZZ	5340-715-7391	1229A1301	78500	RING, RETAINING: BEARING	EA	1
133	20	PAFZZ	3110-768-0551	1228F136	78500	BEARING, ROLLER: PINION GEAR	EA	1
133	21	PAFZZ	2520-110-9604	A93235W777	79780	GEAR ASSEMBLY, PINION (PART OF GEAR ASSEMBLY, FSN 2520-913-0727)	EA	1
133	22	PAFZZ	2520-475-6558	2203E1253	78500	SHIM: .003 IN. THK	EA	V
133	23	PAFZZ	2520-594-5077	2203T462	78500	SHIM: .005 IN. THK	EA	V
133	24	PAFZZ	2520-594-5078	2203U463	78500	SHIM: .010 IN. THK	EA	V
133	25	PAFZZ	3110-100-3646	66212	78500	CONE AND ROLLERS, TAPERED ROLLER BEARING	EA	1
133	26	PAFZZ	3110-100-0608	66462	60038	CUP, TAPERED ROLLER BEARING	EA	1
133	27	PAFZZ		2203Z2496	79780	SPACER: .259 IN. THK	EA	V
133	27	PAFZZ		2203A2497	79780	SPACER: .260 IN. THK	EA	V
133	27	PAFZZ	5340-115-1484	2203B2498	79780	SPACER: .261 IN. THK	EA	V

ILLUSTRATION (a) FIG NO.	(b) ITEM NO.	SMR CODE	FEDERAL STOCK NUMBER	PART NUMBER	FSCM	DESCRIPTION USABLE ON CODE	U/M	QTY INC IN UNIT
133	27	PAFZZ		2203C2499	79780	SPACER; .262 IN. THK	EA	V
133	27	PAFZZ	5340-115-1480	2203D2500	79780	SPACER; .263 IN. THK	EA	V
133	27	PAFZZ		2203E2501	79780	SPACER; .264 IN. THK	EA	V
133	27	PAFZZ	5340-115-1482	2203F2502	79780	SPACER; .270 IN. THK	EA	V
133	27	PAFZZ	5340-115-1482	2203G2503	79780	SPACER; .276 IN. THK	EA	V
133	27	PAFZZ		2203H2504	79780	SPACER; .282 IN. THK	EA	V
133	27	PAFZZ		2203J2506	79780	SPACER; .288 IN. THK	EA	V
133	27	PAFZZ		2203K2507	79780	SPACER; .294 IN. THK	EA	V
133	28	XBFZZ		A32262130	79780	CAGE ASSEMBLY, DIFFERENTIAL	EA	1
133	29	PAFZZ	3110-100-0615	72487	60038	CUP, TAPERED ROLLER BEARING	EA	1
133	30	PAFZZ	3110-913-6117	72225	78500	CONE AND ROLLERS, TAPERED ROLLER BEARINGS	EA	1
133	31	PCFZZ	5330-918-9594	2208E421	97286	GASKET; COVER	EA	1
133	32	PCFZZ	5330-291-1652	A1805B80	78500	SEAL, PLAIN, ENCASED; PINION GEAR	EA	1
133	33	XBFZZ	2520-563-2884	A3266486	78500	COVER; DIFFERENTIAL	EA	1
133	34	PAFZZ	5305-022-7997	S2813-1	78500	SCREW, CAP, HEXAGON HEAD; COVER MTG	EA	8
133	35	PAFZZ	2520-133-9964	A3280X1714	79780	YOKE ASSEMBLY, DRIVE	EA	1
133	36	PAFZZ	3120-217-9661	1229P1030	78500	WASHER, FLAT; YOKE MTG	EA	1
133	37	PAFZZ	5315-010-3389	103389	24617	PIN, COTTER; YOKE MTG	EA	1
133	38	PAFZZ	5310-753-5081	14X57	78500	NUT, CASTELLATED, HEXAGON; YOKE MTG	EA	1
133	39	PAFZZ	5315-013-7214	103388	24617	PIN, COTTER; CARRIER ASSEMBLY	EA	2
133	40	PAFZZ	2520-475-6554	22970563	78500	BLOCK, THRUST	EA	1
133	41	XBFZZ		1229S1553	79780	WASHER, FLAT; CARRIER CAP	EA	4
133	42	PAFZZ	5306-443-1955	10X545	78500	SCREW, CAP, HEXAGON HEAD; CARRIER CAP	EA	4
134	1	PCFZZ	5330-110-8777	2808J1024	79780	GASKET; DIFFERENTIAL MTG	EA	1
134	2	PAOZZ	2520-110-9602	A1898F1072	79780	BREATHER; FRONT AXLE	EA	1
134		XBFFF		3051848-4	92392	HOUSING ASSEMBLY, FRONT AXLE	EA	1
134	3	XAFZZ		3801W1323	79780	HOUSING; FRONT AXLE	EA	1
134	4	PAFZZ	5307-400-3643	4X1445	79780	STUD, PLAIN; DIFFERENTIAL MTG	EA	8
134	5	PAFZZ	5307-950-3031	4X1051	79780	STUD, PLAIN; DIFFERENTIAL MTG	EA	2
134	6	PAFZZ	4730-045-9835	MS49006-14	96906	PLUG, PIPE; DRAIN, 1 1/4 IN.	EA	1
134	7	PAFZZ	3120-111-3680	1829M221	79780	BUSHING; AXLE HOUSING	EA	4
134	8	XBFZZ		1844P536	79780	SPACER, BEARING	EA	2
134	9	PAOZZ	4730-014-3985	143985	24617	PLUG, PIPE; OIL FILTER	EA	1
134		PAFZZ		4X1444	79780	STUD, PLAIN; DIFFERENTIAL MTG	EA	4
134		PAOZZ	4730-111-2511	1250C263	79780	PLUG	EA	1
135	1	PAFZZ	5306-111-3763	3042335-4	92392	PIN; AXLE MTG	EA	2
135	2	XBFZZ		3051763-5	92392	SUPPORT, AXLE	EA	2
135	3	PAOZZ	4730-053-4976	635380	00000	ELBOW, PIPE; LUBE HOSE	EA	2
135	4	PAOZZ	4710-111-2515	3032350-5	92392	TUBE ASSEMBLY, LUBE	EA	1
135	5	PAOZZ		3019807-1	92392	TUBE ASSEMBLY, LUBE	EA	1
135	6	PAFZZ		3042688-6	92392	WASHER, FLAT; SUPPORT MTG	EA	2
135	7	PAFZZ		3017596-6	92392	NUT, SELF-LOCKING, HEXAGON; SUPPORT MTG	EA	2

(1) ILLUSTRATION (a) FIG NO.	(b) ITEM NO.	(2) SMR CODE	(3) NATIONAL STOCK NUMBER	(4) PART NUMBER	(5) FSCM	(6) DESCRIPTION USABLE ON CODE	(7) U/M	(8) QTY INC IN UNIT
135	8	PAOZZ	5310-00-010-3325	MS35338-12	96906	WASHER, LOCK: LUBE TUBE	EA	2
135	9	PAOZZ	5310-00-637-0244	229778	77445	NUT, PLAIN, HEXAGON: LUBE TUBE	EA	2
135	10	PAOZZ	4730-00-060-4208	MS16003-1	96906	FITTING, LUBRICATION: SUPPORT	EA	2
135	11	PAFZZ	5310-00-060-2396	MS35690-2425	96906	NUT, SELF-LOCKING, HEXAGON: AXLE TO SUPPORT	EA	2
135	12	PAFZZ	5310-00-984-8818	MS227183-32	96906	WASHER, PLAIN: AXLE TO SUPPORT	EA	2
135	13	PAFFF	2530-00-018-2201	3050894-9	92392	AXLE ASSEMBLY, REAR	EA	1
136	1	PAOZZ	4730-00-044-4655	444655	24617	PLUG, PIPE: PLANETARY COVER	EA	2
136	2	PAFZZ		3X373	79780	SCREW, CAP, HEXAGON HEAD: PLANETARY COVER MTG	EA	16
136	3	XBFZZ	2520-00-477-1755	3855Y207	79780	COVER, GEAR: PLANETARY	EA	2
136	4	XBFZZ	2010-00-966-4463	18988626	78500	BUTTON, THRUST	EA	2
136	5	PCFZZ	2520-00-589-5870	28081884	78500	GASKET: PLANETARY COVER	EA	2
136	6	PAFZZ	2520-00-630-3058	38800953	79780	GEARSHAFT: PLANETARY GEAR	EA	6
136	7	PAFZZ		1829S877	79780	WASHER, THRUST: GEAR	EA	6
136	8	PAFZZ	3020-00-555-7313	3891M976	78500	GEAR, SPUR: PLANETARY	EA	6
136	9	PAFZZ	2520-00-287-0358	1829N716	78500	WASHER, THRUST: GEAR	EA	6
136	10	PAFZZ	5310-00-268-6039	121508	88044	NUT, PLAIN, HEXAGON: STUD, 5/8-18 THD SIZE	EA	24
136	11	PAFZZ	5305-00-726-2566	MS90727-169	96906	STUD, SPIDER MTG	EA	24
136	12	PAFZZ	5310-00-010-3323	MS35338-10	96906	WASHER, LOCK: SPIDER MTG	EA	24
136	13	PAFZZ		3897U1425	78500	SPIDER: PLANETARY	EA	2
136	14	PCFZZ	5330-00-851-6921	5X589	78500	PACKING, PREFORMED: PLANETARY SPIDER	EA	2
136	15	PAOZZ	5310-00-594-8038	537803	00000	NUT, HEXAGON: WHEEL STUD	EA	24
136	16	PAFZZ	5306-00-579-0463	20X262	78500	BOLT, SHOULDER: WHEEL STUD	EA	24
136	17	PAFZZ	2530-00-133-9996	322F214	79780	HUB ASSEMBLY, WHEEL	EA	2
136	18	PAOZZ	4730-00-111-2513	1250Z182A	79780	PLUG, PIPE, MAGNETIC: PLANETARY	EA	2
136	19	PAFZZ	2520-00-690-9041	3897P1602	79780	SPINDLE: PLANETARY	EA	3
136	20	PCFZZ	5330-00-325-2499	5X604	79780	PACKING, PREFORMED: SPINDLE	EA	2
136	21	PAFZZ	2530-00-112-0073	3802M1443	79780	SHAFT, AXLE	EA	2
136	22	XBFZZ		3905E83X	79780	DEFLECTOR, DIRT	EA	2
136	23	PCFZZ		73059713	90940	OIL SEAL AND SLEEVE ASSEMBLY: AXLE SHAFT	EA	2
136	25	PAFZZ	3110-00-100-0263	497	60038	CONE AND ROLLERS, TAPERED ROLLER BEARING	EA	2
136	26	PAFZZ	3110-00-100-0321	493	60038	CUP, TAPERED ROLLER BEARING	EA	2
136	27	PAFZZ	5306-00-846-5699	10X659	78500	SCREW, CAP, HEXAGON HEAD: BRAKE DRUM MTG	EA	20
136	28	PAFZZ	2530-00-111-5130	3819J322	79780	DRUM, BRAKE, REAR	EA	2
136	29	PAFZZ	5365-00-111-5549	18S40212	79780	RING, RETAINING: GEAR MTG	EA	2
136	30	PAFZZ	3020-00-555-7314	3891L974	78500	GEAR, SPUR: DRIVE	EA	2
136	31	PAFZZ		1829M715	79780	WASHER ASSEMBLY, SUN GEAR	EA	2
136	32	PAFZZ	2530-00-656-6822	1898H762	78500	RETAINER, NUT	EA	4
136	33	PAFZZ	5310-00-111-0802	1827Y230	79780	NUT, CASTELLATED, HEXAGON: PLANETARY SPIDER	EA	2
136	34	PAFZZ	3020-00-540-5885	3892C1589	78500	GEAR, INTERNAL TEETH	EA	2
136	35	PAFZZ	2530-00-111-2516	3897S1345	79780	HUB ASSEMBLY, GEAR	EA	2
136	36	XBFZZ		1820J62	79780	STRAP, LOCK: HUB ASSEMBLY MTG	EA	8

	(a) FIG NO.	(b) ITEM NO.	SMR CODE	FEDERAL STOCK NUMBER	PART NUMBER	FSCM	USABLE ON CODE	U/M
C	136	37	PAFZZ	5305-725-4090	MS90726-156	96906	SCREW, CAP, HEXAGON HEAD; HUB ASSEMBLY MTG	EA
C	136	38	PAFZZ	3110-100-3612	48190	60038	CONE AND ROLLERS, TAPERED ROLLER BEARINGS	EA
C	136	39	PAFZZ	3110-100-0591	48120	60038	CUP, TAPERED ROLLER BEARING	EA
C	137		PAFFF	2530-012-2048	A31-32002780	79780	DIFFERENTIAL ASSEMBLY, REAR AXLE	EA
C	137	1	PAFZZ	3805-757-0186	2214W49	79780	RING, ADJUSTING: BEARING	EA
C	137	2	PAFZZ	3110-100-0573	33472	60038	CUP, TAPERED ROLLER BEARING	EA
C	137	3	PAFZZ		33281	60038	CONE AND ROLLERS, TAPERED ROLLER BEARING	EA
C	137	4	PAFFF	2520-738-9318	A48-3235M351	79780	DIFFERENTIAL ASSEMBLY, REAR AXLE	EA
C	137	5	PAFZZ	5306-292-3109	3048777-1	78500	BOLT, SPECIAL: DIFFERENTIAL	EA
C	137	6	XAFZZ		A3235X882	79780	CASE ASSEMBLY, DIFFERENTIAL	EA
C	137	7	PAFZZ	5306-292-3108	3048776-3	78500	BOLT, SPECIAL: DIFFERENTIAL	EA
C	137	8	PAFZZ	5310-221-4698	N28-1	78500	NUT, PLAIN, HEXAGON: RING GEAR MTG	EA
C	137	9	PAFZZ	2520-112-7216	A35702-6	79780	GEAR ASSEMBLY, PINION AND RING	EA
C	137	10	PAFZZ	5305-719-5235	MS90727-114	96906	SCREW, CAP, HEXAGON HEAD: RING GEAR MTG	EA
C	137	11	PAFZZ	3120-545-3708	1229M1027	78500	WASHER, THRUST: SUN GEAR	EA
C	137	12	PAFZZ	3020-540-5811	2234B470	78500	GEAR, BEVEL: SUN	EA
C	137	13	PAFZZ	2520-393-6194	3278D82	78500	SPIDER, DIFFERENTIAL	EA
C	137	14	PAFZZ	3020-555-7447	2233G449	78500	GEAR, BEVEL: PLANETARY	EA
C	137	15	PAFZZ	5310-596-0608	1229L1026	78500	WASHER, THRUST: PLANETARY GEAR	EA
C	137	16	PAFZZ	5310-021-8487	218487	00000	NUT, CASTELLATED, HEXAGON: CASE CLAMPING	EA
C	137	17	PAFZZ	5315-597-2723	12460342	78500	PIN, DOWEL: CARRIER	EA
C	137	18	PAFZZ	5305-896-9733	3051890-6	78500	SETSCREW: ADJUSTING	EA
C	137	19	PAFZZ	5310-998-5023	MS24400C8	96906	NUT, PLAIN, HEXAGON: ADJUSTING SCREW LOCK	EA
C	137	20	PAFZZ	2520-133-9995	A2-32002780	79780	CARRIER ASSEMBLY, DIFFERENTIAL	EA
C	137	21	PAFZZ	5340-715-7391	1229A1301	78500	RING, RETAINING: BEARING	EA
C	137	22	PAFZZ	3110-100-7335	U1207TM	25883	BEARING, ROLLER: PINION GEAR	EA
C	137	23	PAFZZ	5365-377-8812	2203K453	78500	SHIM: .003 IN. THK	EA
C	137	24	PAFZZ	5365-377-8811	2203J450	78500	SHIM: .005 IN. THK	EA
C	137	25	PAFZZ	2520-897-3445	2203J452	78500	SHIM: .010 IN. THK	EA
C	137	26	PAFZZ	3110-987-0630	55187C	60038	CONE AND ROLLERS, TAPERED ROLLER BEARING	EA
C	137	27	PAFZZ	3110-100-0601	55443	60038	CUP, TAPERED ROLLER BEARING	EA
C	137	28	PAFZZ		2203N1054	78500	SPACER: .219 IN. THK	EA
C	137	28	PAFZZ		2203P1056	78500	SPACER: .220 IN. THK	EA
C	137	28	PAFZZ		2203Q1057	78500	SPACER: .221 IN. THK	EA
C	137	28	PAFZZ		2203R1058	78500	SPACER: .222 IN. THK	EA
C	137	28	PAFZZ		2203S1059	78500	SPACER: .223 IN. THK	EA
C	137	28	PAFZZ		2203T1060	78500	SPACER: .224 IN. THK	EA
C	137	28	PAFZZ		2203U1061	78500	SPACER: .230 IN. THK	EA
C	137	28	PAFZZ		2203V1062	78500	SPACER: .236 IN. THK	EA
C	137	28	PAFZZ		2203V1063	78500	SPACER: .242 IN. THK	EA
C	137	28	PAFZZ		2203V1064	78500	SPACER: .248 IN. THK	EA
C	137	28	PAFZZ		2203V1065	78500	SPACER: .254 IN. THK	EA

(1) ILLUSTRATION (a) FIG NO.	(b) ITEM NO.	(2) SMR CODE	(3) FEDERAL STOCK NUMBER	(4) PART NUMBER	(5) FSCM	(6) DESCRIPTION USABLE ON CODE	(7) U/M	(8) QTY INC IN UNIT
C 137	29	XBFZZ		A3226M117	78500	CAGE ASSEMBLY, DIFFERENTIAL	EA	1
C 137	30	PAFZZ	3110-226-3498	55176C	60038	CONE AND ROLLERS, TAPERED ROLLER BEARING	EA	1
C 137	31	PCFZZ	2520-572-4212	3308R418	78500	GASKET: COVER	EA	1
C 137	32	PCFZZ	5330-143-8666	A12097515	78500	SEAL, PLAIN, ENCASED: PINION GEAR	EA	1
C 137	33	XBFZZ		A3266E83	79780	COVER: DIFFERENTIAL	EA	1
C 137	34	PAFZZ	5305-292-4994	52714-1	78500	SCREW, CAP, HEXAGON HEAD: COVER MTG	EA	8
C 137	35	PAFZZ	3805-894-7545	A328082342	78500	YOKE ASSEMBLY, DRIVE	EA	1
C 137	36	PAFZZ	5310-286-3727	1229E1331	78500	WASHER, FLAT: YOKE MTG	EA	1
C 137	37	PAFZZ	5315-013-7214	103388	24617	PIN, COTTER: YOKE MTG	EA	1
C 137	38	PAFZZ	5310-275-1974	13399	78500	NUT, CASTELLATED, HEXAGON: YOKE MTG	EA	1
C 137	39	PAFZZ	5315-013-7214	103388	24617	PIN, COTTER: CARRIER ASSEMBLY	EA	2
C 137	40	PAFZZ		A229W1557	79780	WASHER, FLAT: CARRIER CAP	EA	4
C 137	41	PAFZZ	5305-898-5107	10X544	78500	SCREW, CAP, HEXAGON HEAD: CARRIER CAP	EA	4
C 138	1	PAFZZ	5310-982-4974	MS21041C8	96906	NUT, SELF-LOCKING, HEXAGON: DIFFERENTIAL MTG	EA	14
C 138	2	PAFZZ		3043828-7	92392	WASHER, FLAT: DIFFERENTIAL	EA	14
C 138	3	PCFZZ	5330-111-5129	2808K1025	79780	GASKET: DIFFERENTIAL	EA	1
C 138	4	XABZZ		3051843-5	92392	HOUSING ASSEMBLY, REAR AXLE	EA	1
C 138	5	PAOZZ	4730-014-3985	143985	24617	PLUG, PIPE: FILLER	EA	1
C 138	6	PAOZZ	2520-110-9602	A1898F1072	79780	BREATHER ASSEMBLY	EA	1
C 138	7	PAOZZ	4730-111-2511	1250C263	79780	PLUG, PIPE: DRAIN	EA	1
C 138	8	PAFZZ		1825M221	79780	BUSHING: REAR AXLE HOUSING	EA	4
C 138	9	XBFZZ		1844P536	79780	SPACER: BEARING	EA	2
C 138	10	PAFZZ	5307-842-8365	4X1050	78500	STUD, PLAIN: DIFFERENTIAL MTG	EA	10
C 138	11	PAFZZ		3048404-2	92392	STUD, PLAIN: DIFFERENTIAL MTG	EA	4
						GROUP 34 - MAIN FRAME		
C 139		PAOFF	2540-776-0103	7760103	00000	PINTLE ASSEMBLY	EA	1
C 139	1	PAOZZ		125438	00000	NUT, SLOTTED, HEXAGON: PINTLE MTG	EA	1
C 139	2	PAOZZ	5310-984-8818	MS15795-31	96906	WASHER, FLAT: PINTLE, 1 1/2 IN.	EA	1
C 139	3	XAOZZ		7760104	00000	PINTLE	EA	1
C 139	4	PAOZZ	5340-704-4253	7044253	00000	SPRING: PINTLE LATCH	EA	1
C 139	5	PAOZZ	5310-050-3520	503520	00000	NUT, SLOTTED, HEXAGON: LATCH BOLT	EA	1
C 139	6	PAOZZ	5315-298-1499	MS24665-360	96906	PIN, COTTER: LATCH BOLT	EA	1
C 139	7	XAOZZ	5340-704-9603	7049603	00000	LOCK, PINTLE	EA	1
C 139	8	XAOZZ	2540-771-4880	7049602	00000	LATCH, PINTLE	EA	1
C 139	9	XAOZZ		7714881	00000	PIN, LATCH	EA	1
C 139	10	PAOZZ	4730-050-4203	MS15001-1	96906	FITTING, LUBRICATION: PINTLE LATCH	EA	2
C 139	11	XAOZZ		8668096	00000	BOLT, MACHINE: LATCH	EA	1
C 139	12	XAOZZ	4010-129-3221	42C15120205	00000	CHAIN	EA	1
C 139	13	PAOZZ	5315-059-0219	590219	00000	PIN, COTTER: CHAIN	EA	1
C 139	14	PAOZZ	5315-849-5582	MS24665-502	96906	PIN, COTTER: PINTLE NUT, 7/16 X 3 IN.	EA	1
C 140	1	XBHHH		3050988-9	92392	FRAME ASSEMBLY, FRONT SECTION	EA	1

ILLUSTRATION (a) FIG NO.	(b) ITEM NO.	SMR CODE	FEDERAL STOCK NUMBER	PART NUMBER	FSCM	DESCRIPTION USABLE ON CODE	U/M	QTY INC IN UNIT
140	2	PAFZZ	5306-111-3797	3041936-0	92392	PIN, PIVOT	EA	2
140	3	PAFZZ	2510-110-5197	3042898-1	92392	COLLAR, PIVOT PIN, INNER	EA	3
140	4	PAFZZ	2510-111-5198	3042896-5	92392	COLLAR, PIVOT PIN, OUTER	EA	3
140	5	PAFZZ	2510-111-5199	3042895-7	92392	COLLAR, PIVOT PIN: BOSS	EA	4
140	6	PAFZZ	5305-725-4137	MS90726-169	96906	SCREW, CAP, HEXAGON HEAD: RETAINER MTG	EA	12
140	7	PAFZZ	2510-133-9946	3042994-8	92392	RETAINER ASSEMBLY, BUSHING	EA	2
140	8	PCFZZ	3805-481-3438	W408-324-4	96879	SEAL, BEARING	EA	4
140	9	XAFZZ		3042941-9	92392	RETAINER, SEAL	EA	2
140	10	PAFZZ	3120-103-9788	2558840	80648	BEARING: PIVOT PIN	EA	2
140	11	XAFZZ		3042939-3	92392	RETAINER, BEARING	EA	2
140	12	PAOZZ	4730-050-4208	MS15003-1	96906	FITTING, LUBRICATION: PIVOT PIN	EA	2
140	13	PAFZZ	5305-269-3212	MS90725-61	96906	SCREW, CAP, HEXAGON HEAD: BEARING RETAINER	EA	4
140	14	PAFZZ		MS20364-1018A	96906	NUT, SELF-LOCKING, HEXAGON: BEARING RETAINER	EA	12
140	15	PAFZZ	5365-115-6140	3042937-7	92392	SPACER, PIVOT PIN	EA	1
140	16	PAFZZ		3041927-9	92392	NUT, SELF-LOCKING, HEXAGON: PIVOT PIN	EA	1
140	17	XBHHH		3051145-5	92392	FRAME ASSEMBLY, REAR	EA	1
140	18	PAFZZ		3020678-3	92392	BEARING, SLEEVE: AXLE SUPPORT	EA	2
140	19	PAFZZ	3120-111-3679	3042935-1	92392	BEARING, SLEEVE: PIVOT PIN	EA	1
		PAOZZ	5310-010-3319	MS35338-6	96906	WASHER, LOCK: FIRE EXTINGUISHER MTG	EA	3
		PAOZZ		901310-3	92392	NUT, PLAIN, HEXAGON: FIRE EXTINGUISHER MTG	EA	3
		PAOZZ	4210-889-2221			EXTINGUISHER, FIRE	EA	1
		XBOZZ		3052109-0	92392	PLATE, INSTRUCTION: ENGINE AND TRANSMISSION	EA	1
		XBOZZ		3051182-8	92392	PLATE, IDENTIFICATION: ENGINE TEMPERATURE	EA	1
		XBOZZ		3051714-8	92392	PLATE, IDENTIFICATION: AUXILIARY FIELD LIGHT SWITCH	EA	1
		XBOZZ		3051957-3	92392	PLATE, INSTRUCTION: AUXILIARY FIELD LIGHT, OFF-ON	EA	1
		XBOZZ		3051969-8	92392	PLATE, IDENTIFICATION: VEHICLE LIGHT SWITCH	EA	1
		XBOZZ		3051713-0	92392	PLATE, IDENTIFICATION: MAIN FIELD LIGHT SWITCH	EA	1
		XBOZZ		3052004-3	92392	PLATE, IDENTIFICATION: CONVERTER TEMPERATURE WARNING LIGHT	EA	1
		XBOZZ		2051708-0	92392	PLATE, IDENTIFICATION: TRANSMISSION OIL PRESSURE GAGE	EA	1
		XBOZZ		925465-7	92392	RIVET, DRIVE: PLATE MTG	EA	34
		PAOZZ	5305-984-6211	901173-5	92392	SCREW, ROUNDHEAD, MOUNTING FIRE EXTINGUISHER	EA	3
		XBOZZ		3052129-8	92392	PLATE, INSTRUCTION: HYDRAULIC OIL FILTER	EA	1
		XBOZZ		3052173-6	92392	PLATE, INSTRUCTION: LUBRICATION	EA	1
		XBOZZ		3051721-3	92392	PLATE, INSTRUCTION: LUBRICATION EJECTION	EA	1
		XBOZZ		925784-1	92392	RIVET, DRIVE: INSTRUCTION PLATE	EA	48
		XBOZZ		3051715-5	92392	PLATE, IDENTIFICATION: HOUR METER	EA	1
		XBOZZ		925465-7	92392	RIVET, DRIVE: PLATE MTG	EA	2
		XBOZZ		3052011-8	92392	PLATE, IDENTIFICATION: PARKING BRAKE WARNING LIGHT	EA	1
		XBOZZ		3051967-2	92392	PLATE, IDENTIFICATION: HORN BUTTON	EA	1
		XBOZZ		3051710-6	92392	PLATE, IDENTIFICATION: AMMETER	EA	1
		XBOZZ		3051707-2	92392	PLATE, IDENTIFICATION: BRAKE AIR PRESSURE GAGE	EA	1
		XBOZZ		3052115-7	92392	PLATE, INSTRUCTION: START PROCEDURE	EA	1

(1) ILLUSTRATION (a) FIG NO.	(b) ITEM NO.	(2) SMR CODE	(3) FEDERAL STOCK NUMBER	(4) PART NUMBER	(5) FSCM	(6) DESCRIPTION USABLE ON CODE	(7) U/M
		XB0ZZ		3051711-4	92392	PLATE, IDENTIFICATION: CONVERTER TEMPERATURE GAGE	EA
		XB0ZZ		3052012-6	92392	PLATE, INSTRUCTION: IGNITION OFF-ON	EA
		XB0ZZ		3051743-7	92392	PLATE, INSTRUCTION: TRANSMISSION CONTROL	EA
		XB0ZZ		3052108-2	92392	PLATE, INSTRUCTION: BOOM AND BUCKET CONTROL	EA
		XB0ZZ		3052100-9	92392	PLATE, INSTRUCTION: COLD WEATHER START	EA
		XB0ZZ		3052114-0	92392	PLATE, INSTRUCTION: CLUTCH RELEASE CONTROL	EA
		XB0ZZ		3052124-9	92392	PLATE, INSTRUCTION: AIR CLEANER INDICATION	EA
		XB0ZZ		3052144-7	92392	PLATE, INSTRUCTION: TRANSPORTATION DATA	EA
		XB0ZZ		3052128-0	92392	PLATE, IDENTIFICATION: VEHICLE	EA
		XB0ZZ		3052143-9	92392	PLATE, INSTRUCTION: OIL CHECK	EA
						GROUP 35 - BULK MATERIAL	
		PC0ZZ	2940-603-4555			HOSE	RL
		PA0ZZ	4710-277-5529			TUBE, COPPER	RL
		PA0ZZ	4710-278-5619			TUBE, COPPER	RL
		PC0ZZ	4720-113-5484	FC107-10	01276	HOSE	FT
		PC0ZZ	4720-639-9899			HOSE	RL
		PC0ZZ	4720-824-4373			HOSE	FT
		PC0ZZ	4720-930-4509			HOSE	RL
		PC0ZZ	4720-930-4515			HOSE	FT
		PC0ZZ	4720-930-5389			HOSE	RL
		PC0ZZ		FC107-12	01276	HOSE	FT

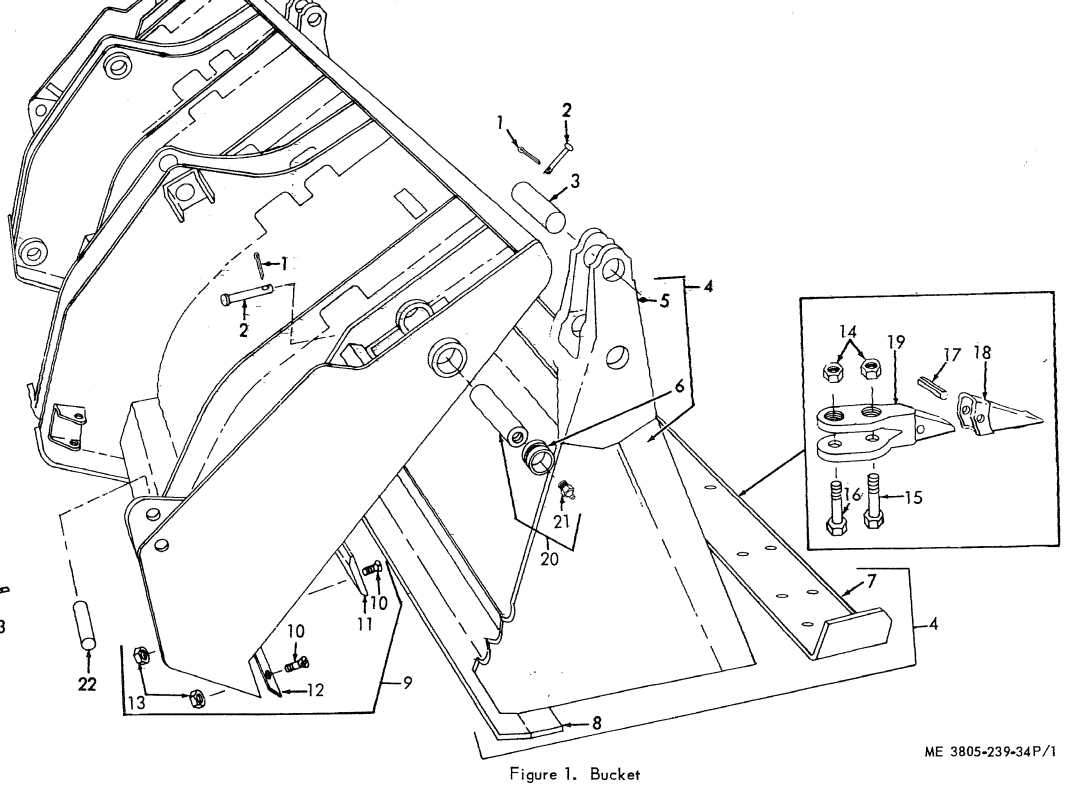

ME 3805-239-34P/1

Figure 1. Bucket

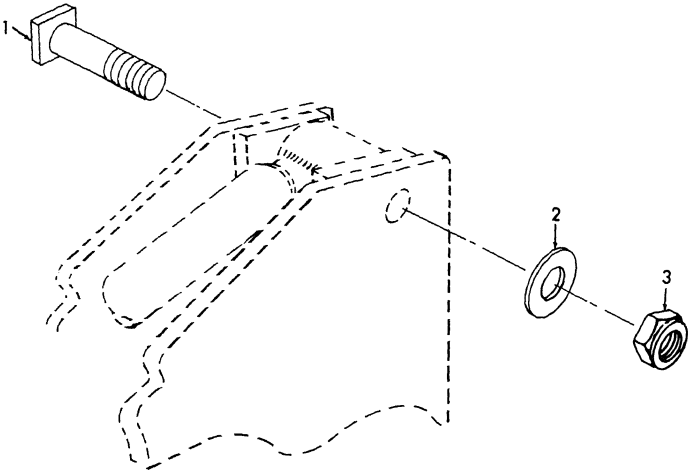
1
2
3

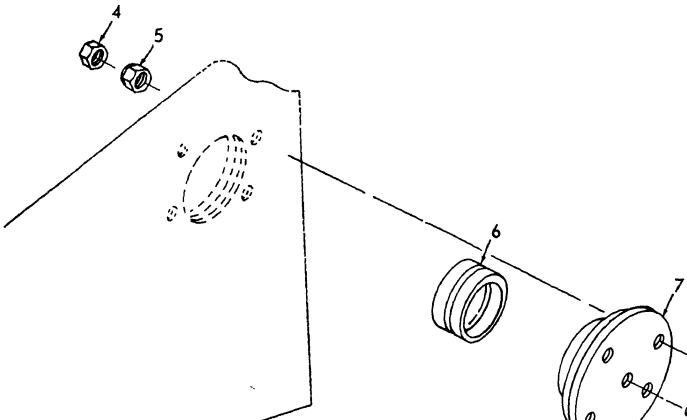
4
5
6
7

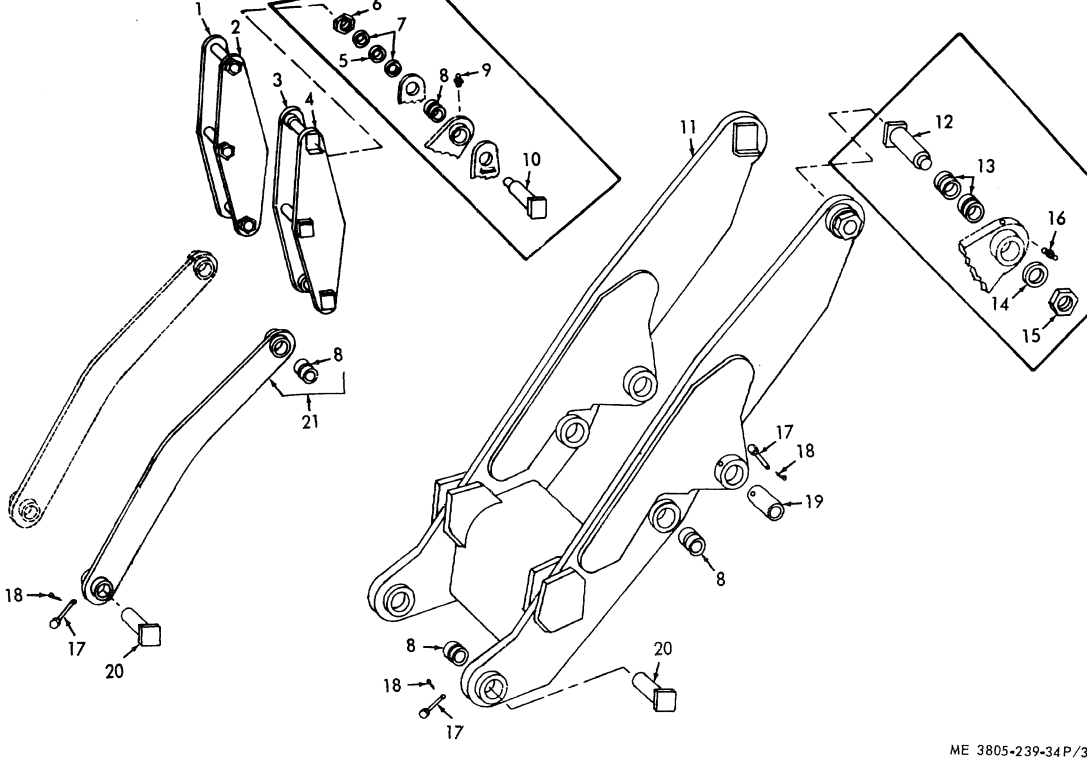

Figure 3. Boom and Link Unit

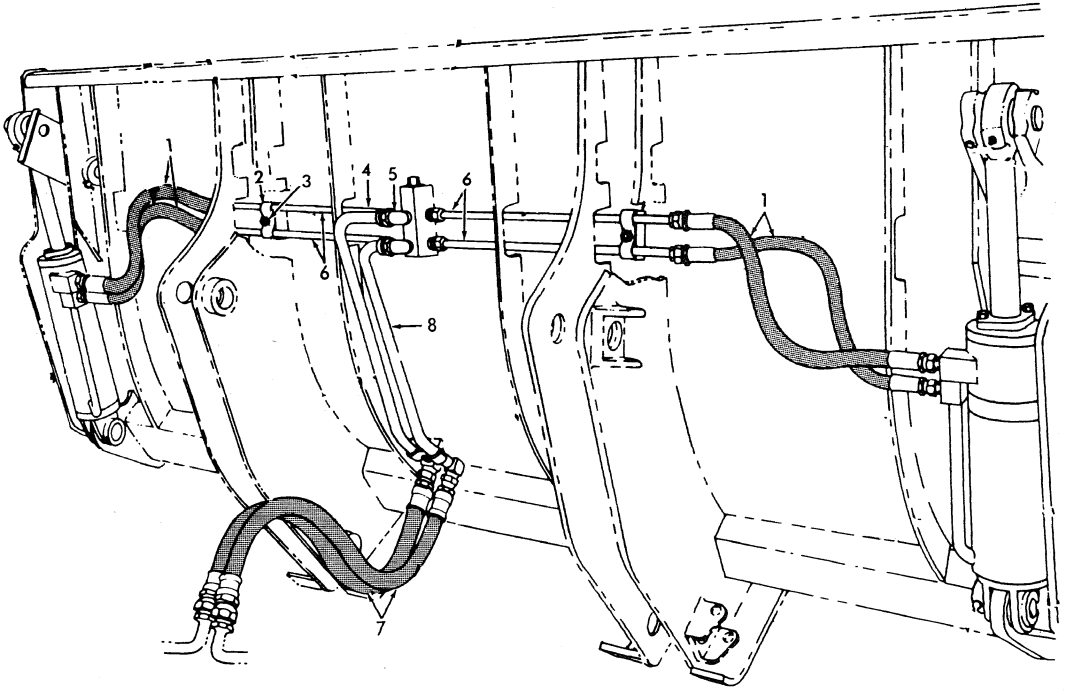

ME 3805-239-34P/4

Figure 4. Bucket Hydraulic Lines

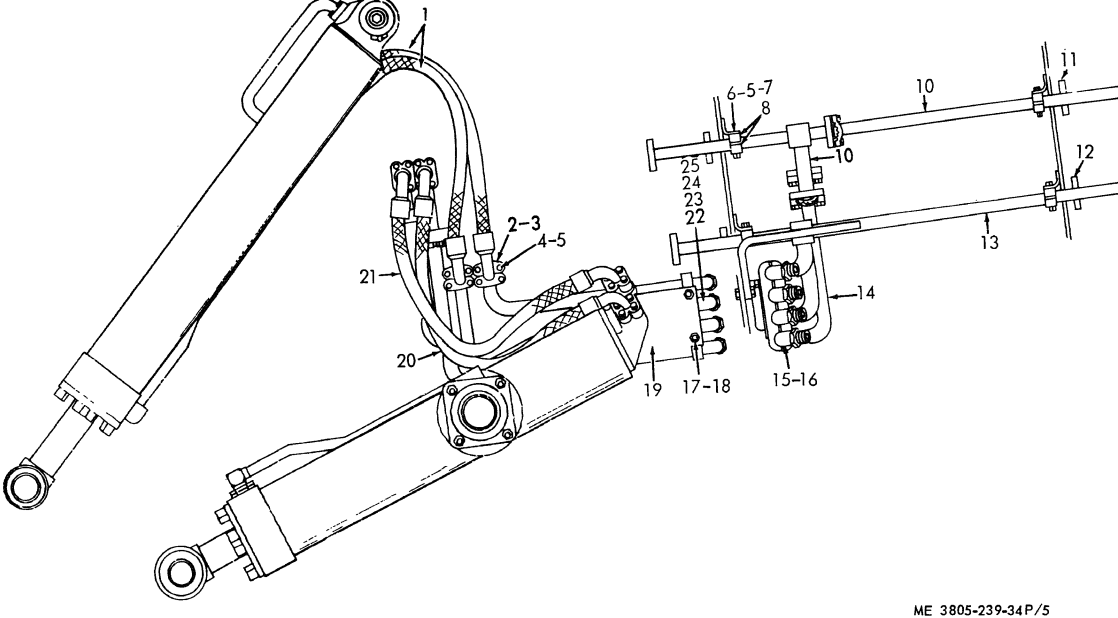

Figure 5. Cross Frame Hydraulic Lines

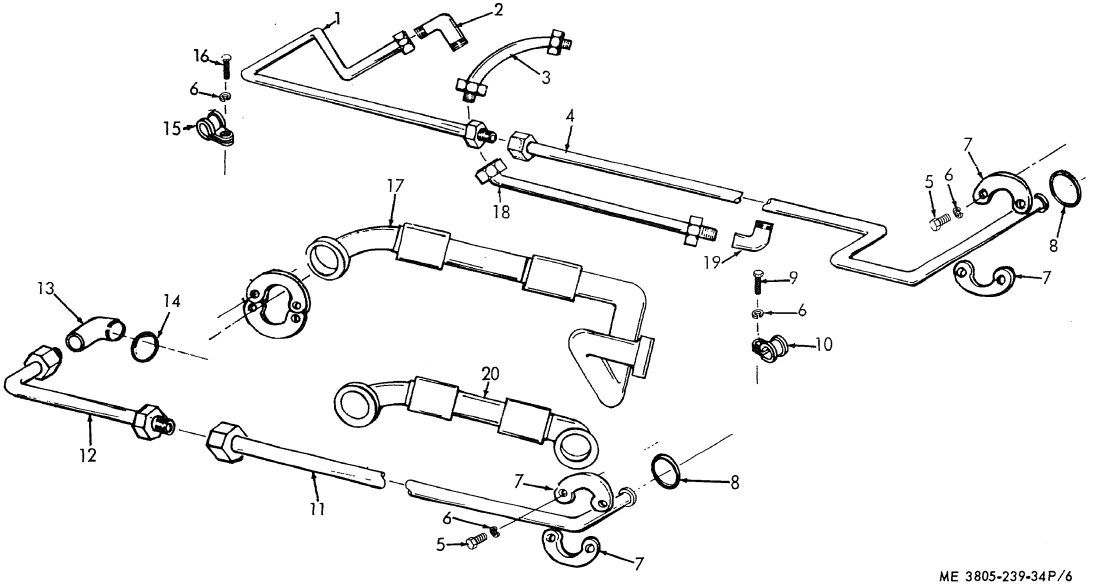

ME 3805-239-34P/6

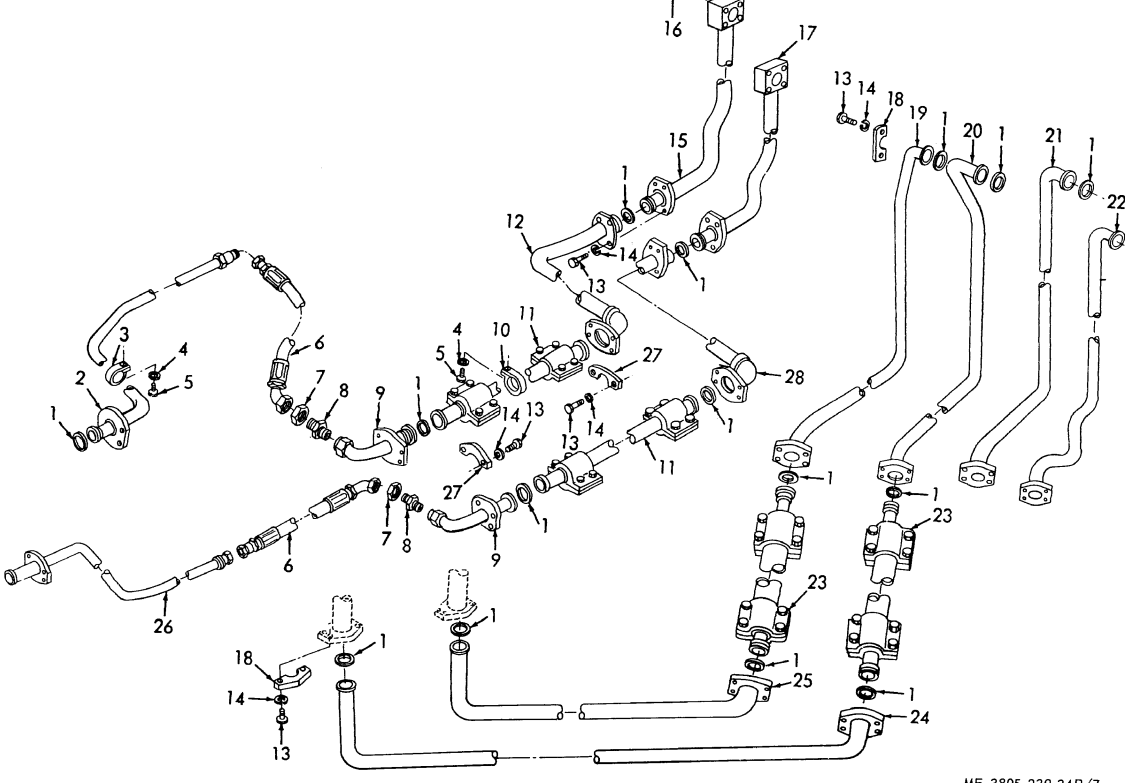

Figure 7. Valve to Cross Frame Hydraulic Lines

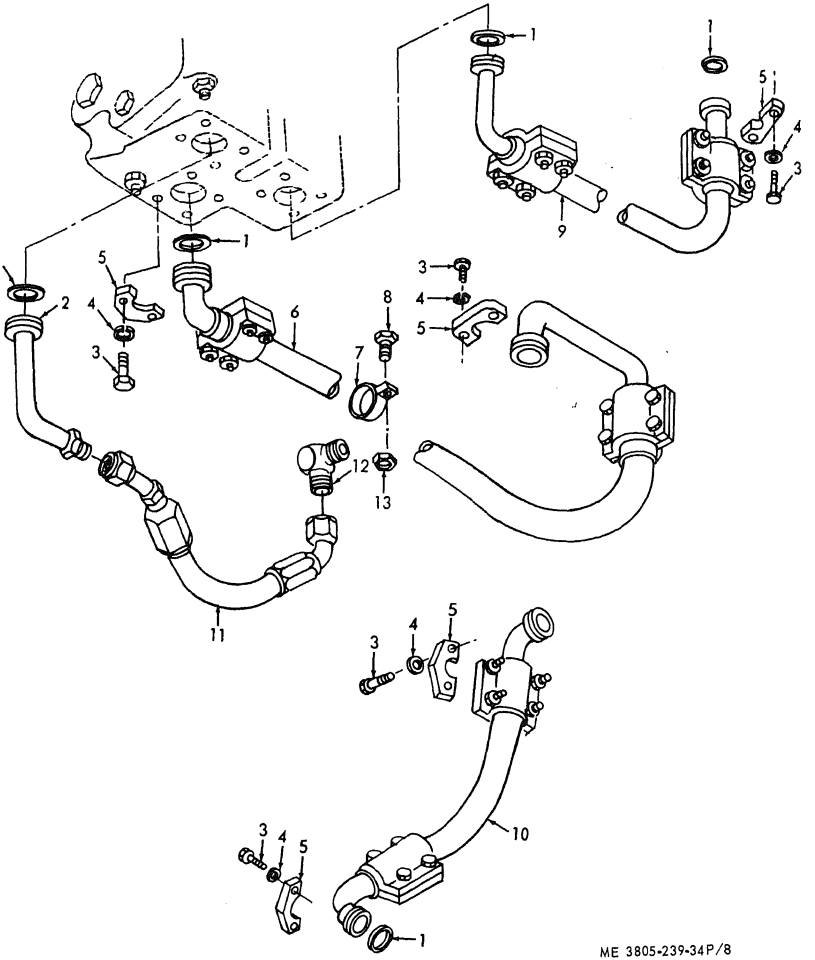

ME 3805-239-34P/8

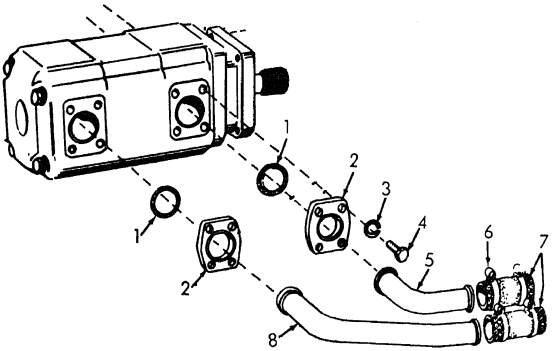

ME 3805-239-34P/9

Figure 9. Hydraulic Pump Lines

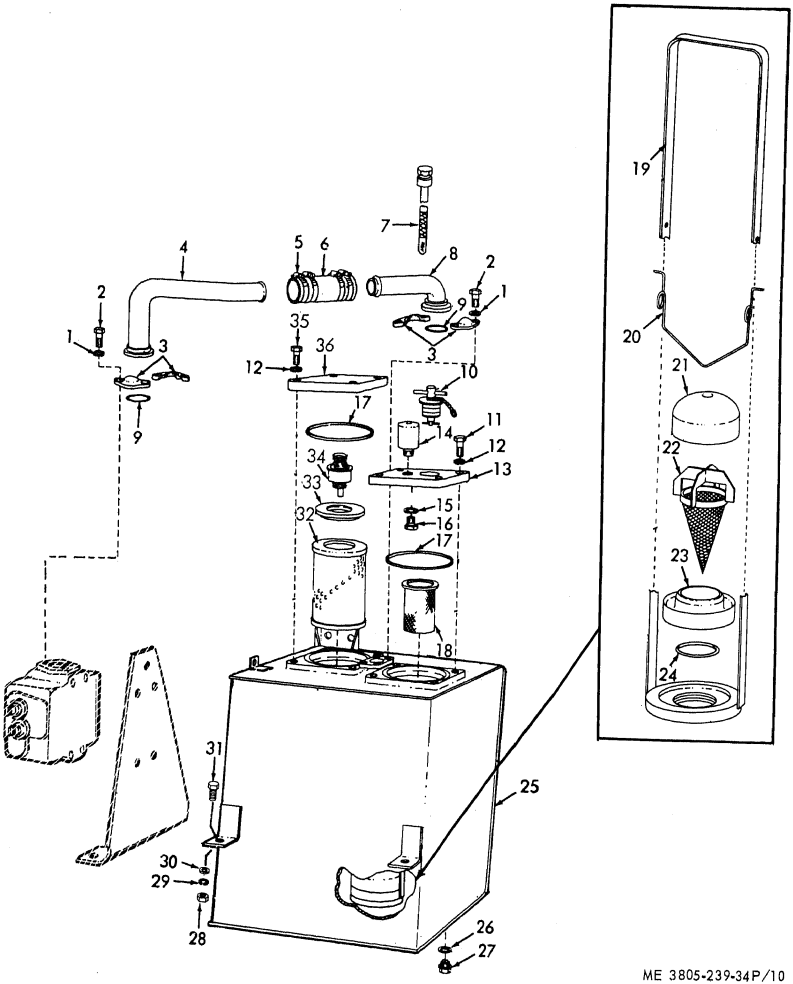

ME 3805-239-34P/10

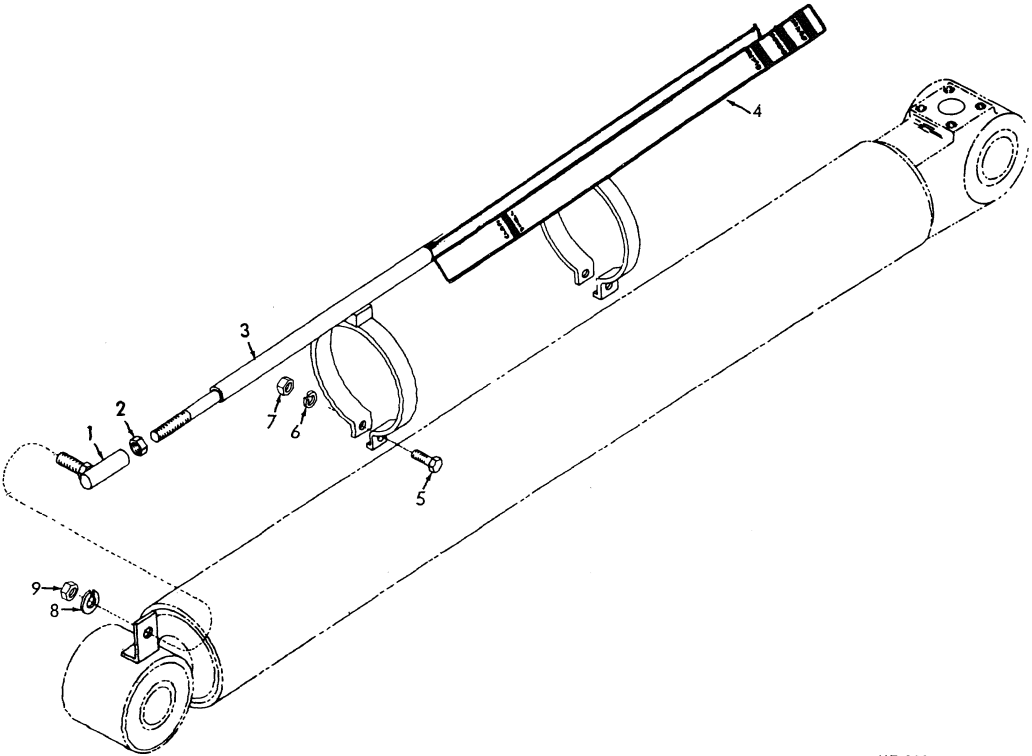
1
2
3
4
5
6
7
8
9

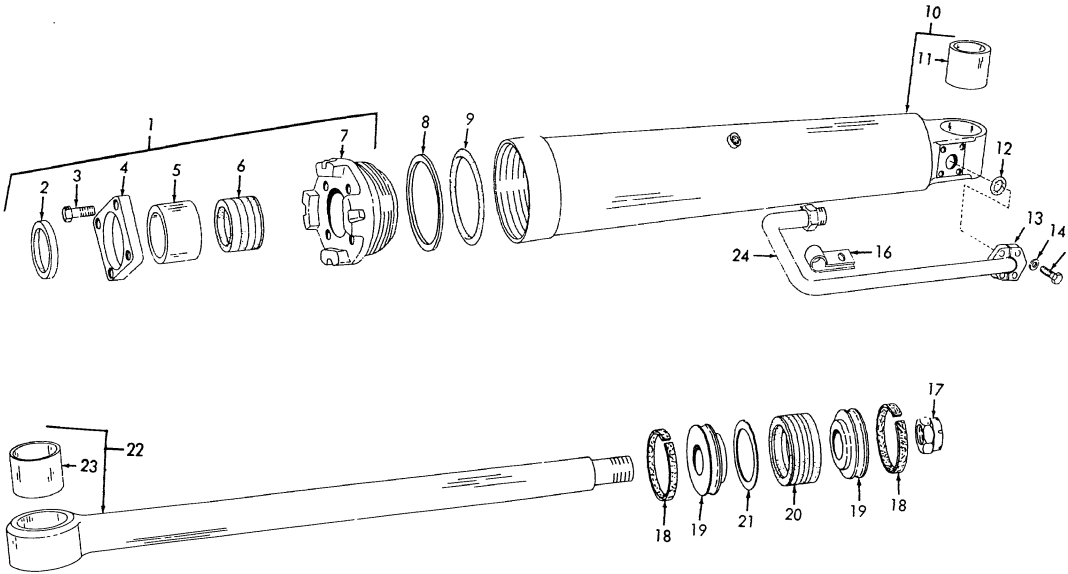

ME 3805-239-34P/12

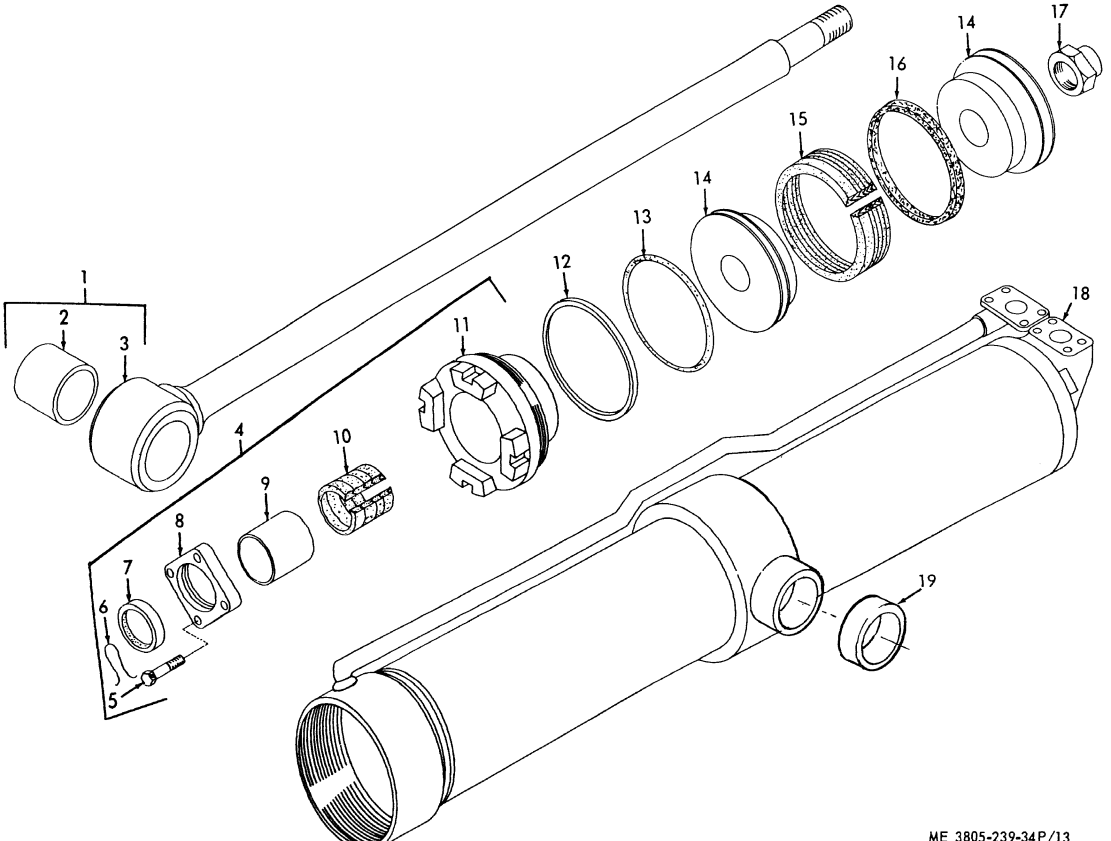

ME 3805-239-34P/13

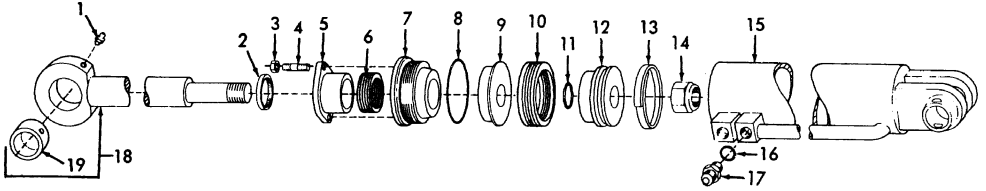

ME 3805-239-34P/14

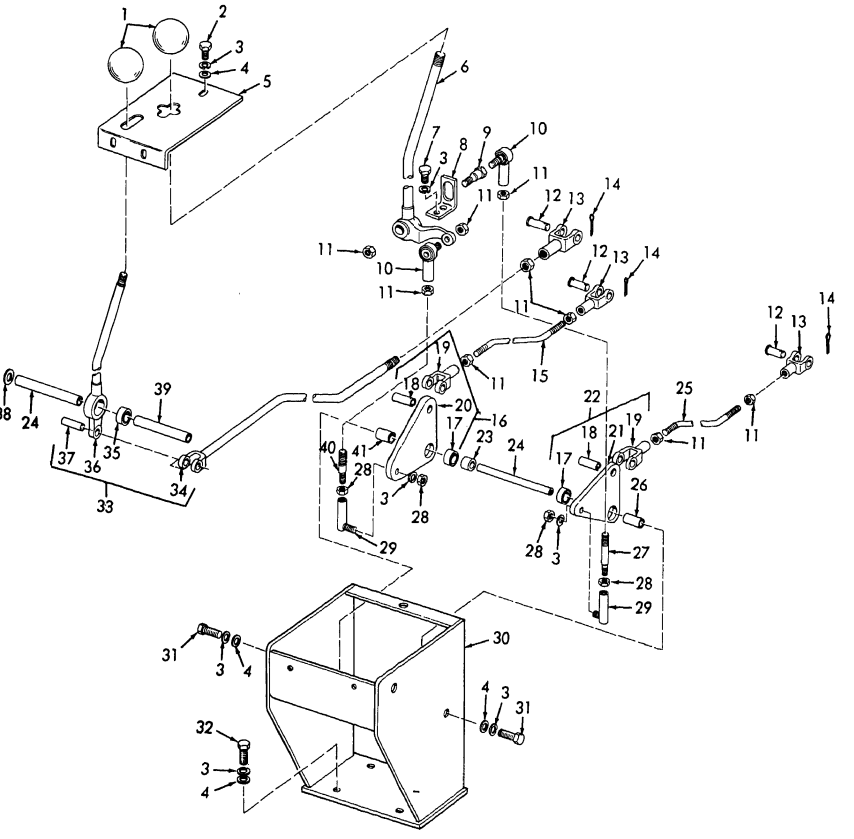

Figure 15. Hydraulic Controls

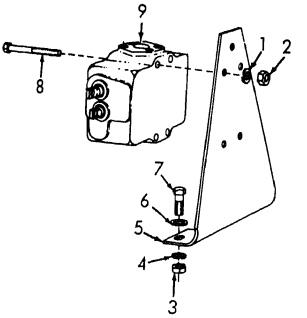

ME 3805-239-34P/16

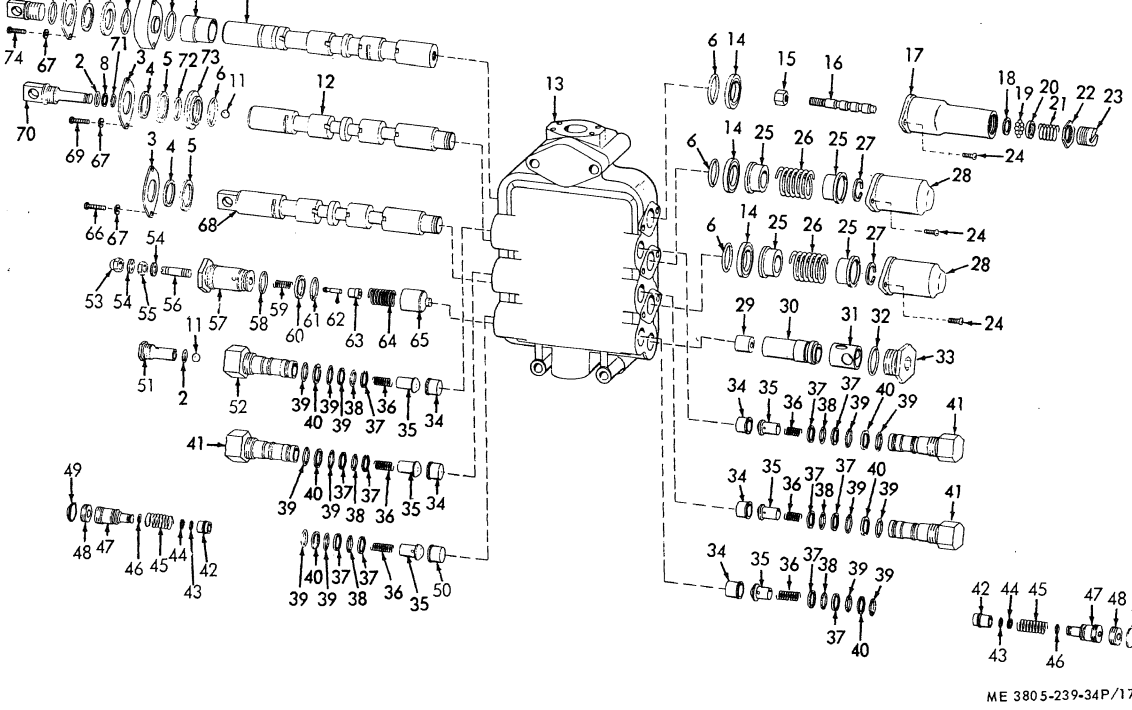

Figure 17. Hydraulic Control Valve

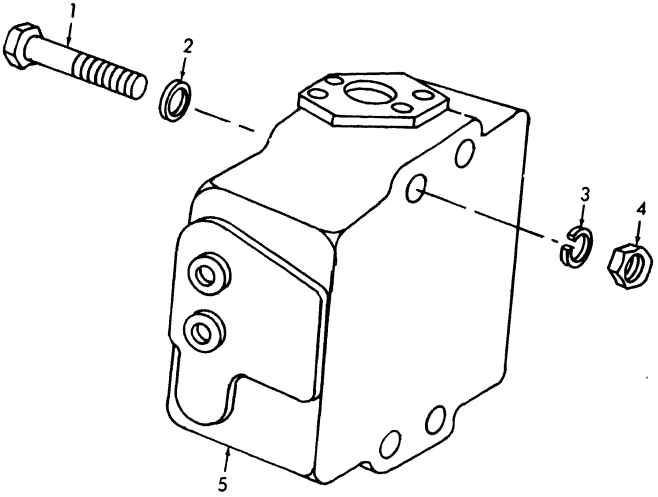

ME 3805-239-34P/18

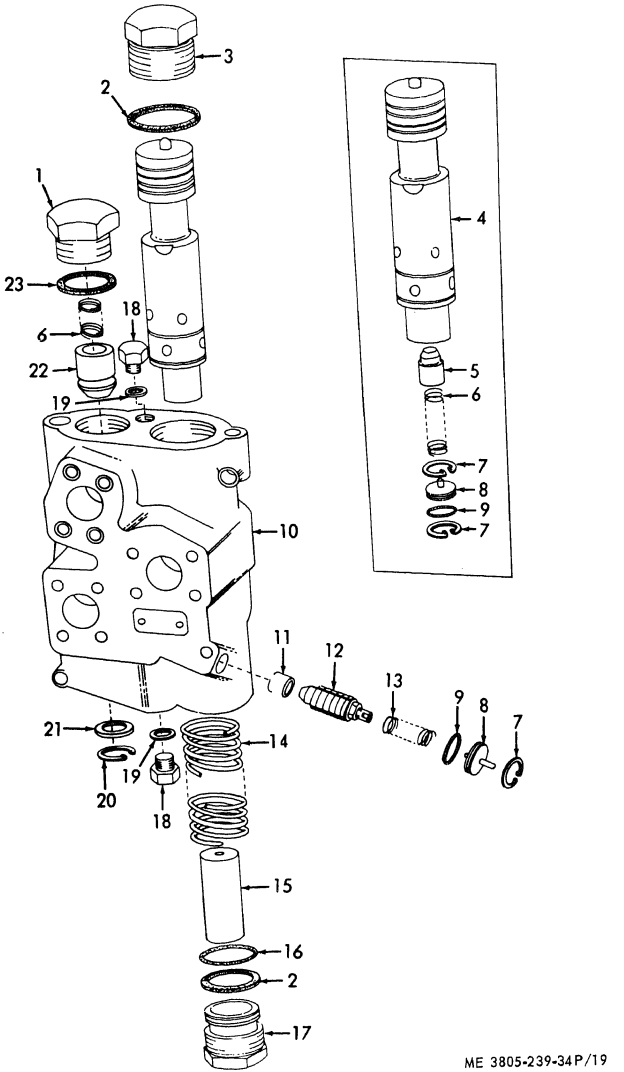

Figure 19. Demand Valve

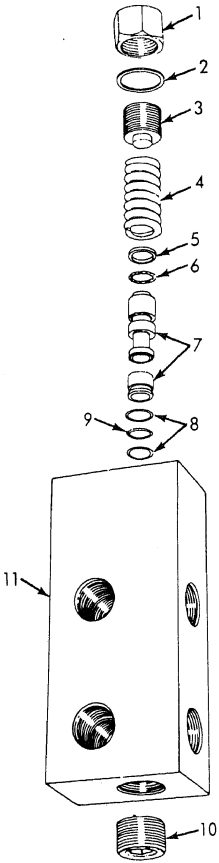

ME 3805-239-34P/20

Figure 20. Clam Relief Valve

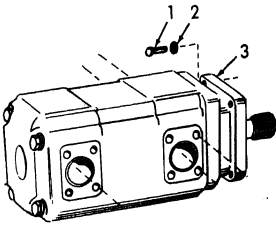

ME 3805-239-34P/2

Figure 21. Hydraulic Pump and Mounting Hard

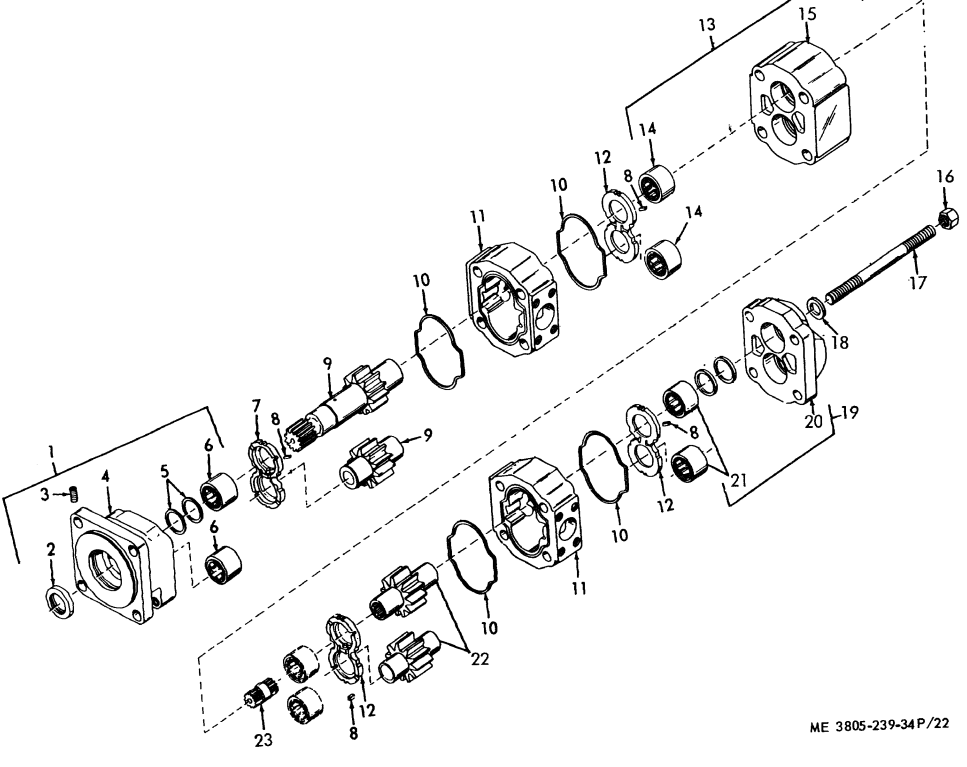

Figure 22. Main Hydraulic Pump

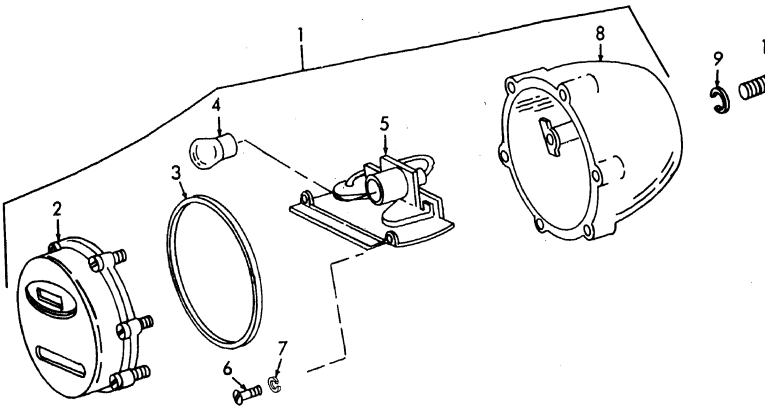

ME 3805-23

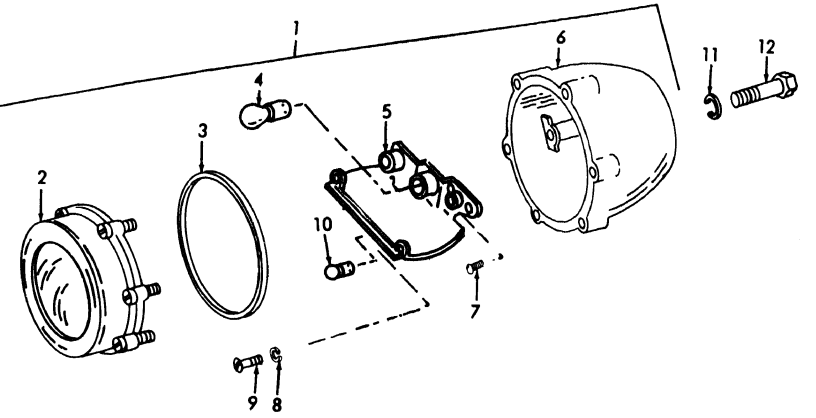

ME 3805-239-34P/24

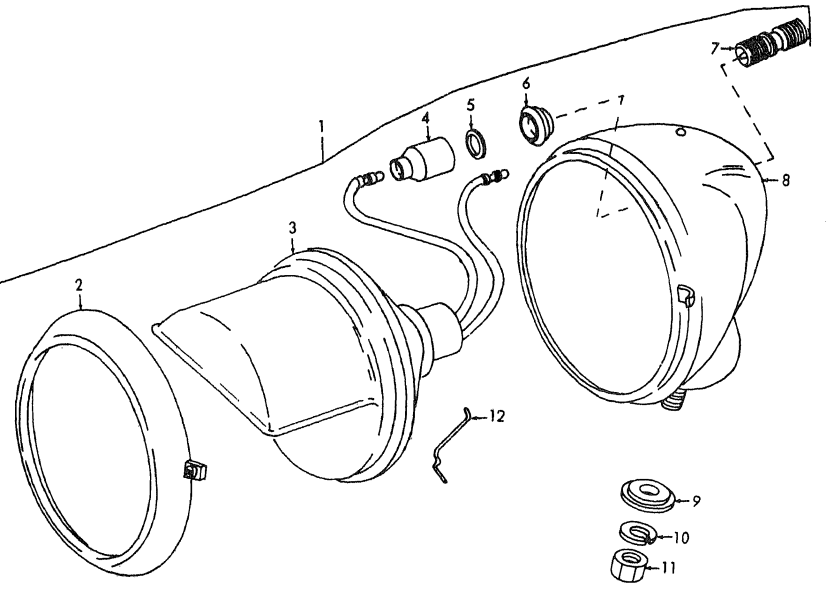

ME 3805-239-34P/25

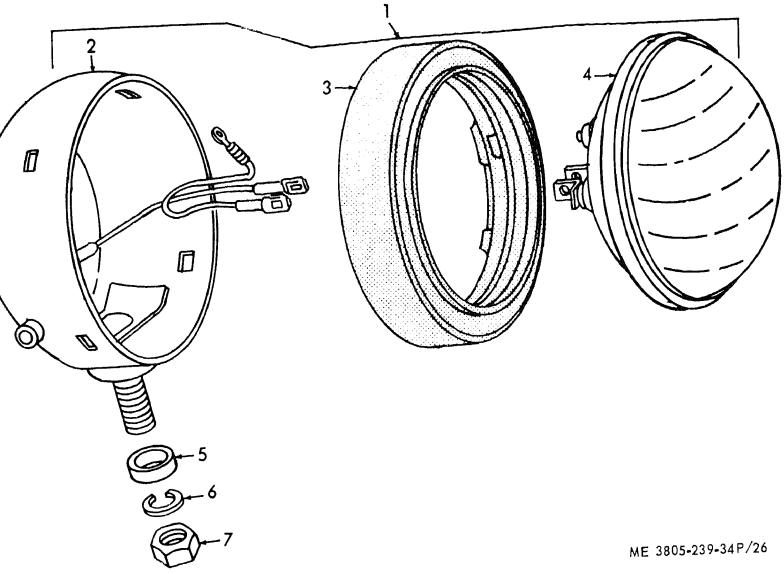

Figure 26. Headlight and Taillight

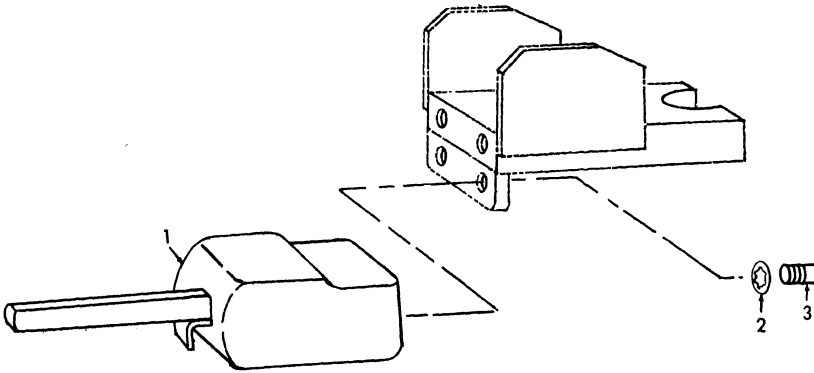

ME 3805-239-34F

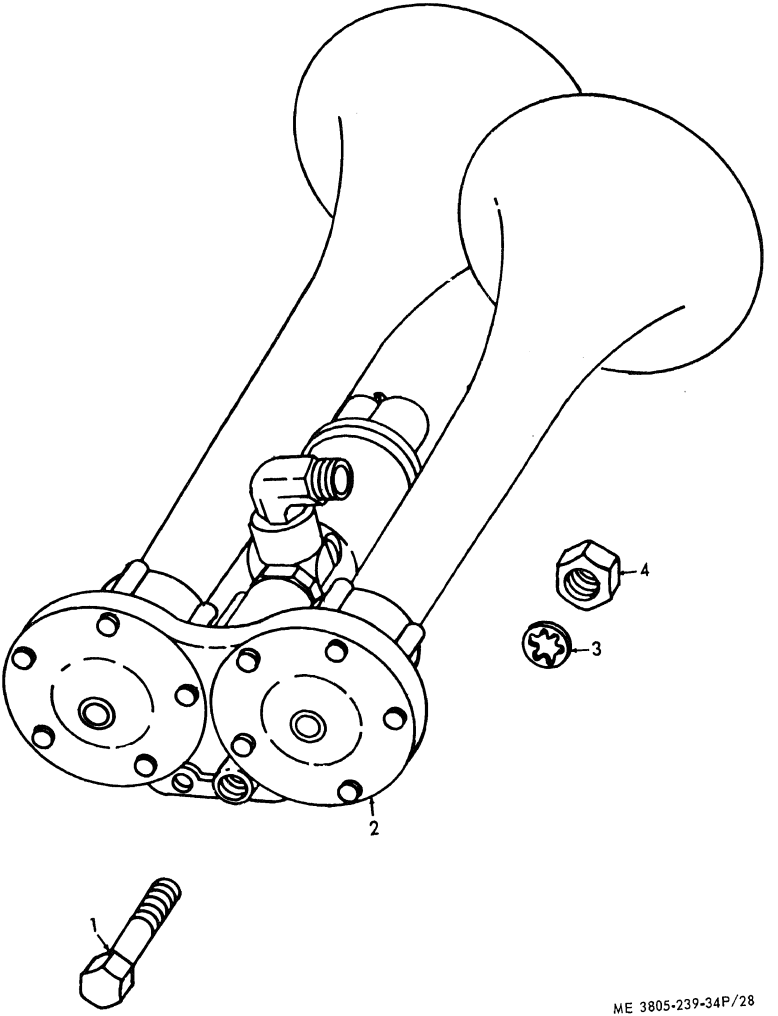

ME 3805-239-34P/28

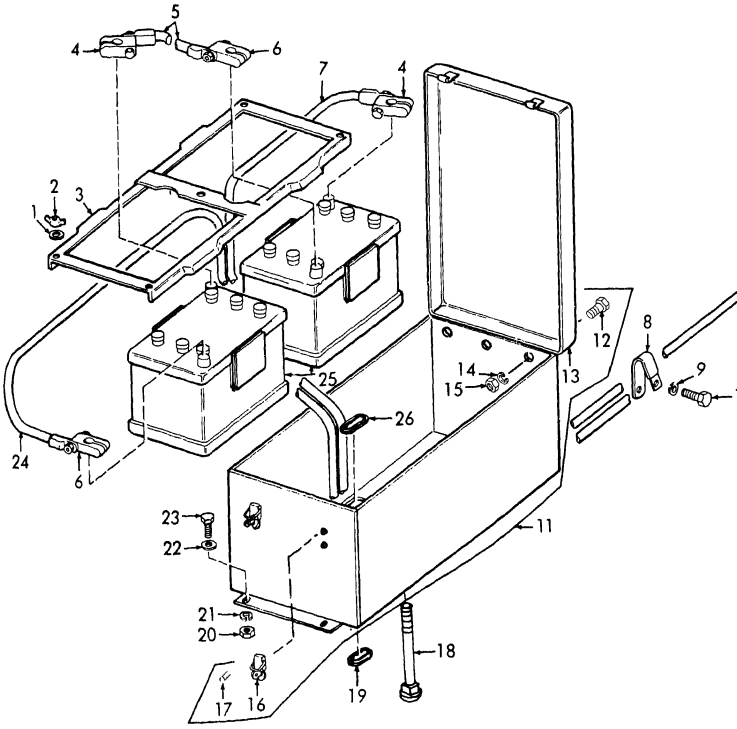

ME 3805-239

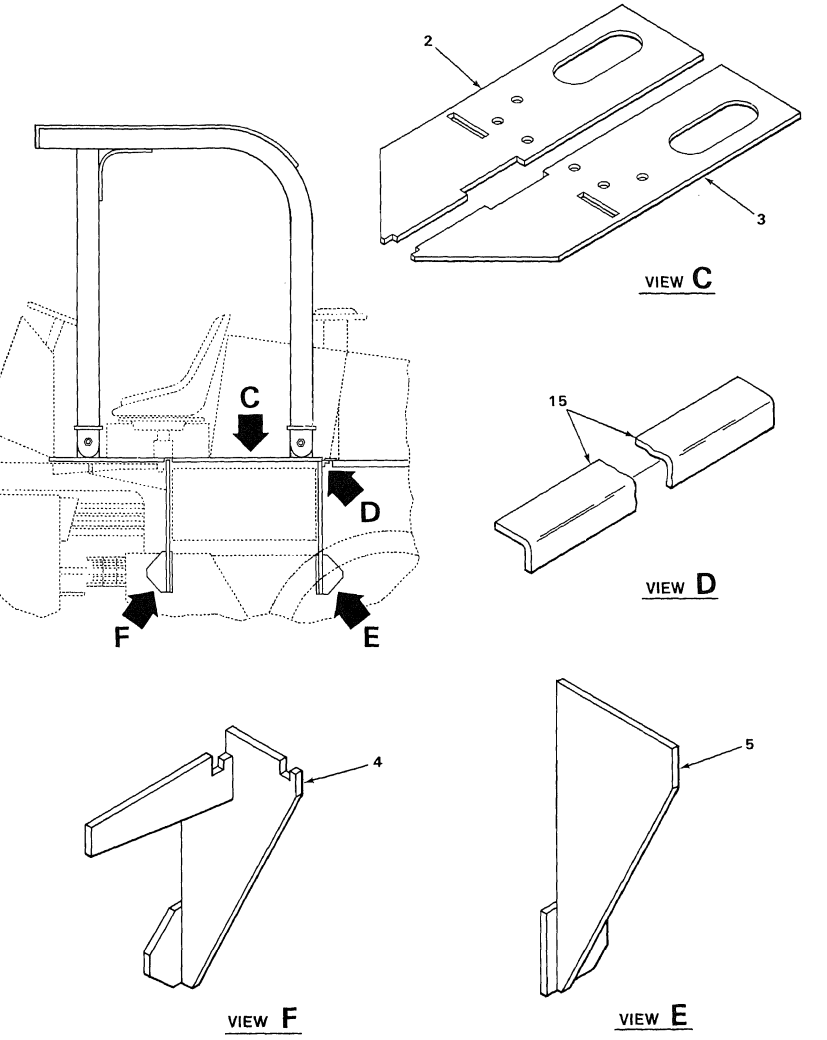

Figure 29A. Roll Over Protective Structure Assembly (Sheet 1 of 2)

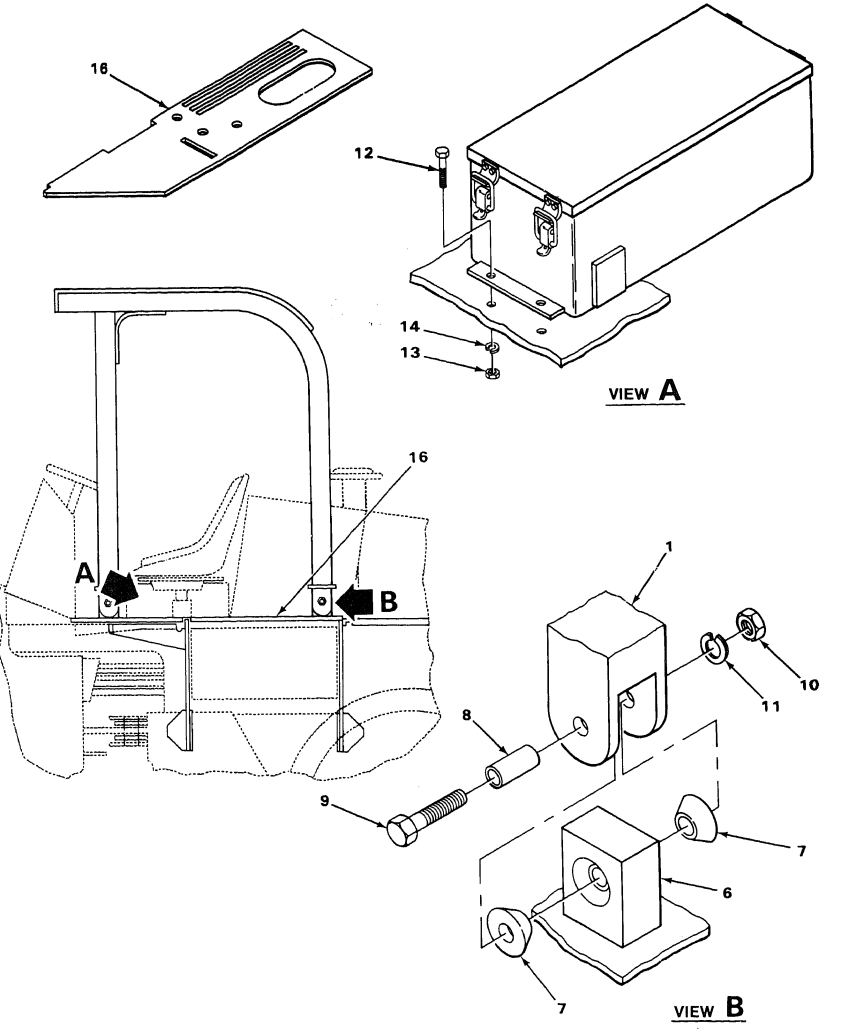

TA220108

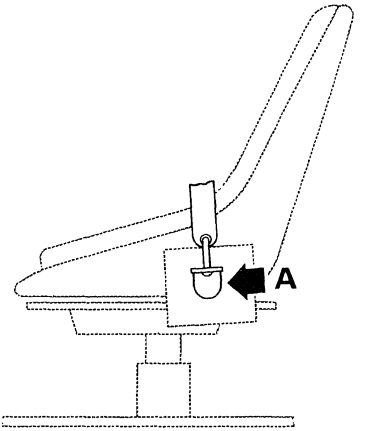

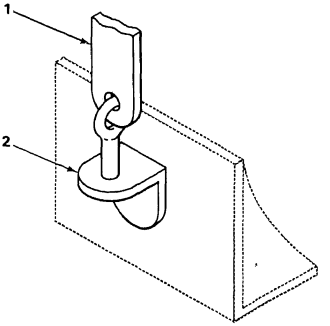

VIEW A

TA220107

Figure 29B. Seat Belt Assembly Installation

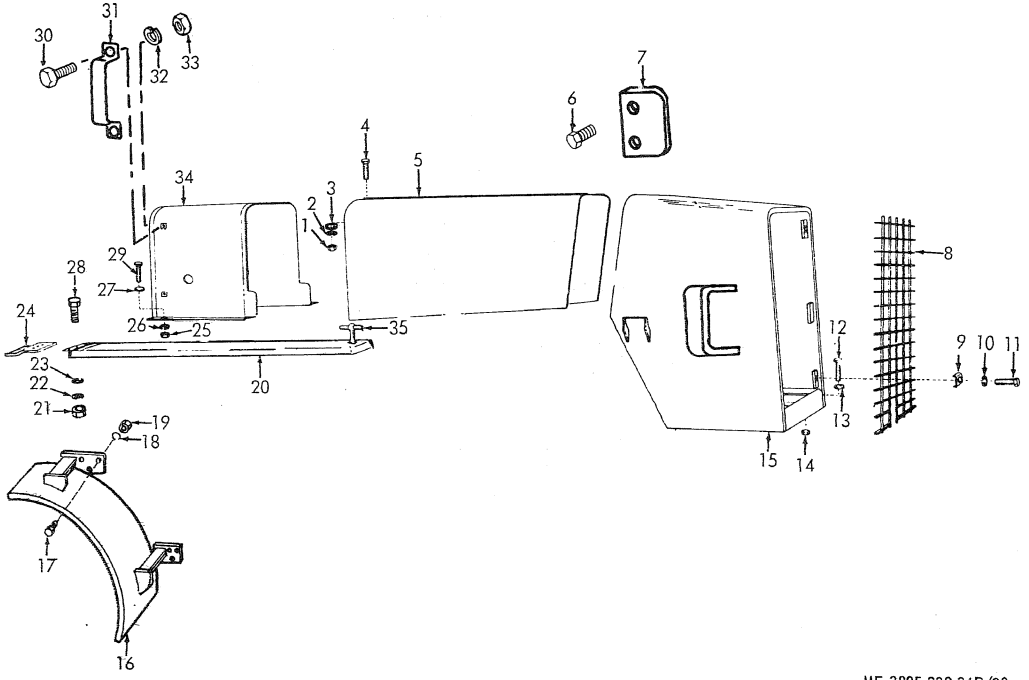

Figure 30. Hood and Fenders

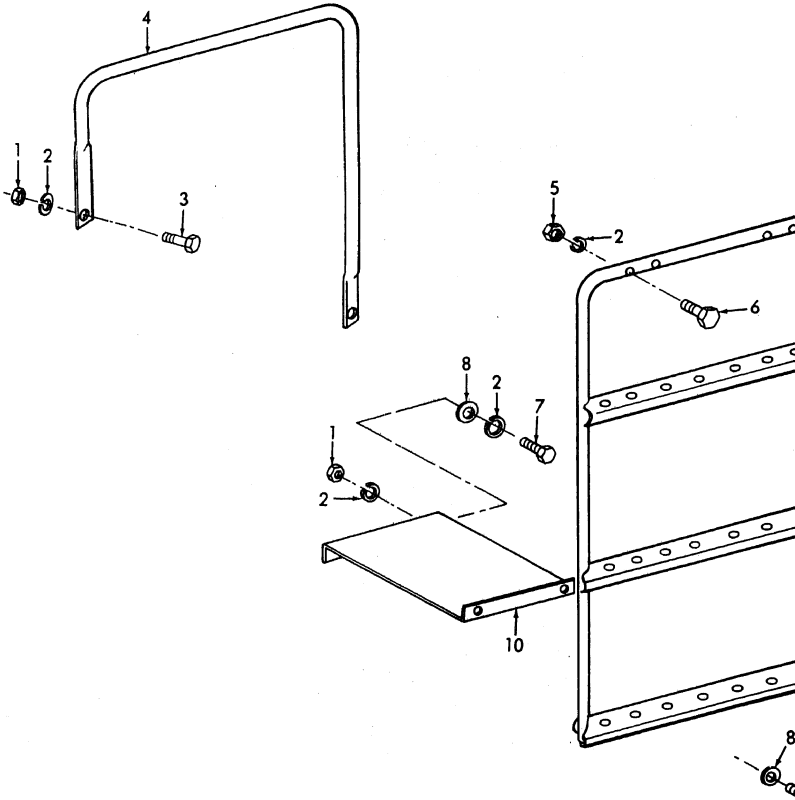

ME 3805-239

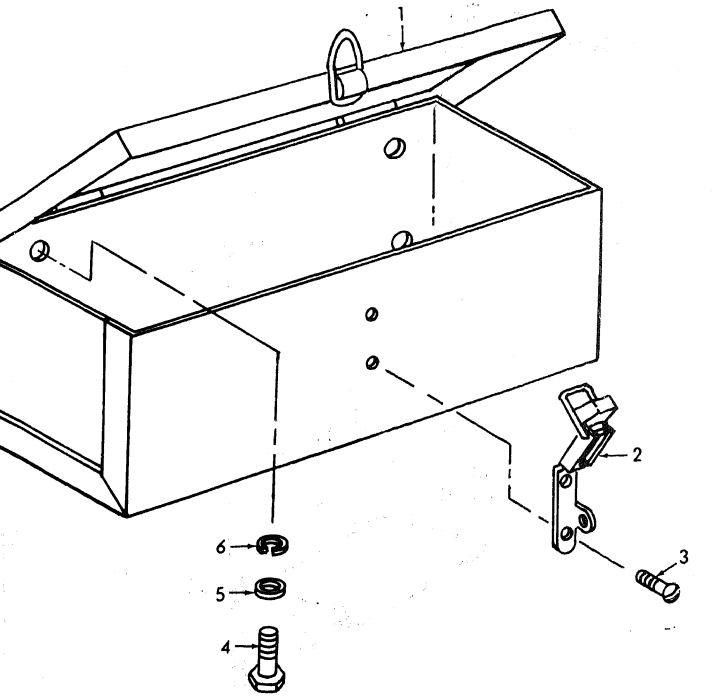

ME 3805-239-34P/32

Figure 32. Tool Box

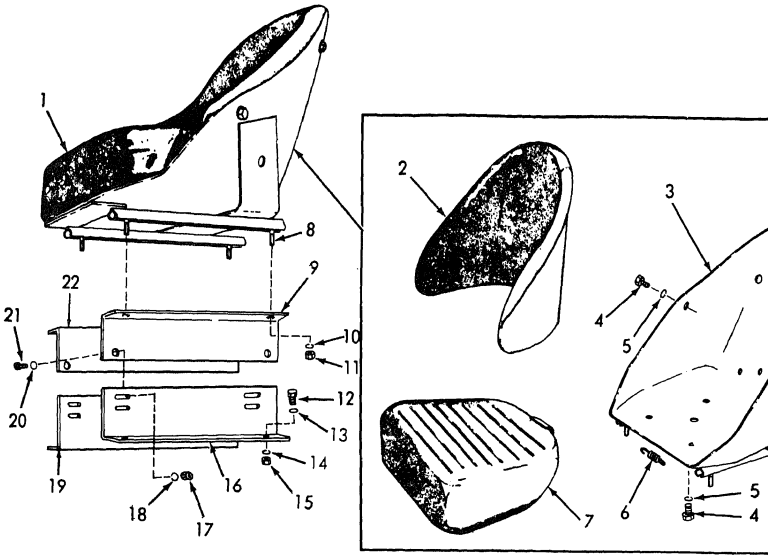

ME 3805-239

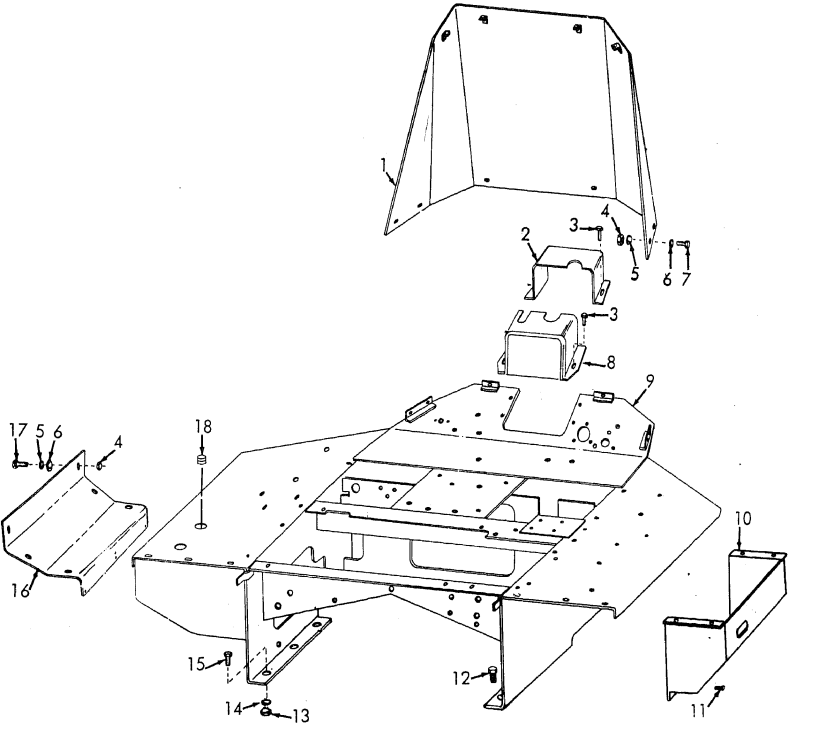

Figure 34. Platform and Covers

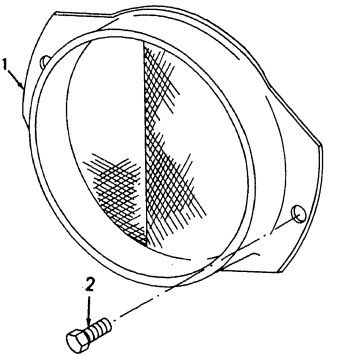

ME 3805-239-34P/35

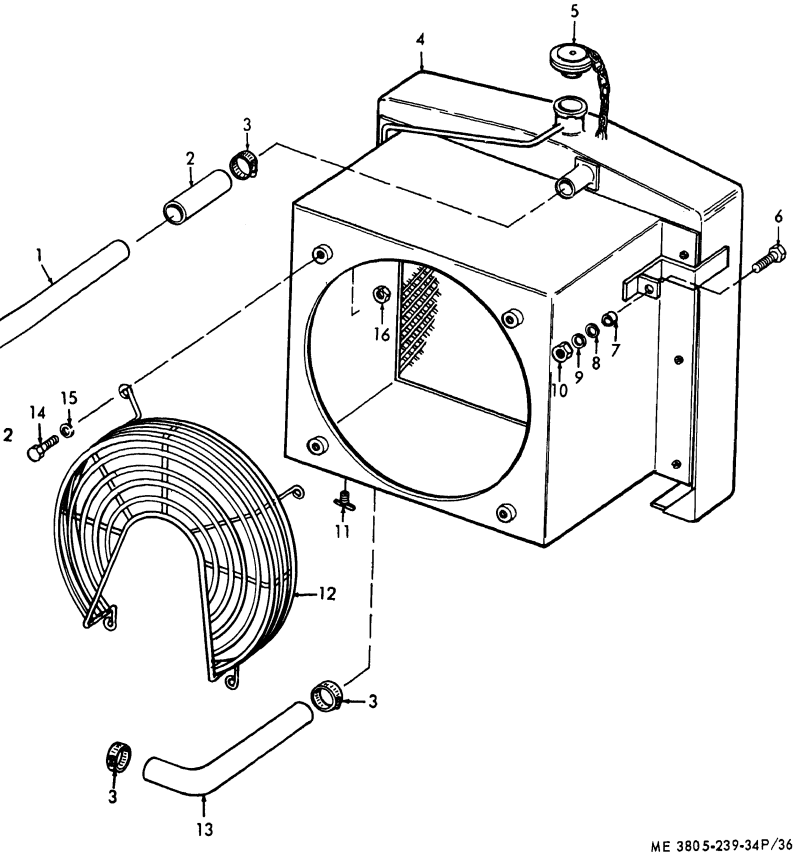

Figure 36. Radiator, Guards and Hoses

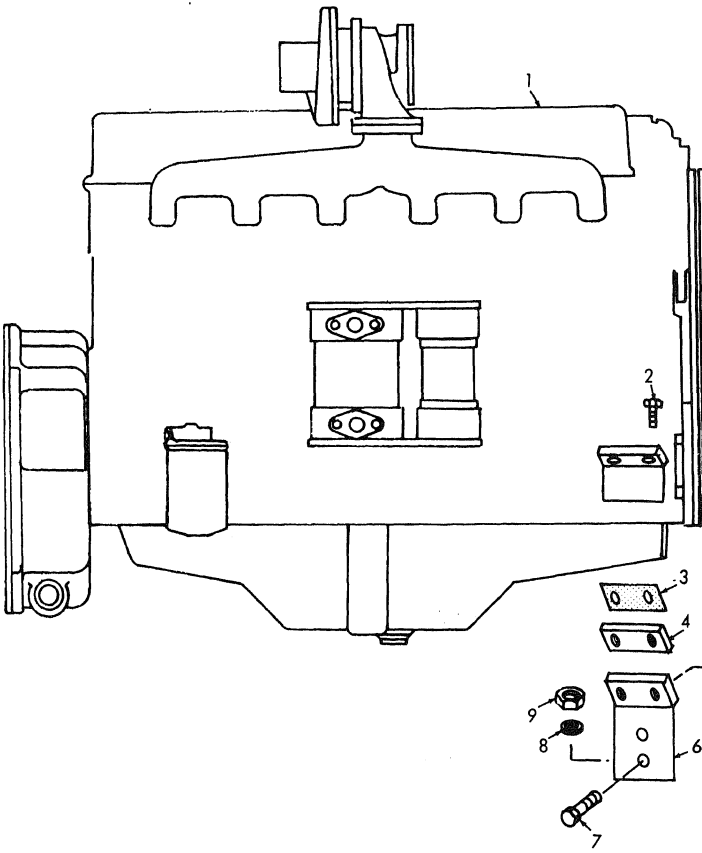

ME 38

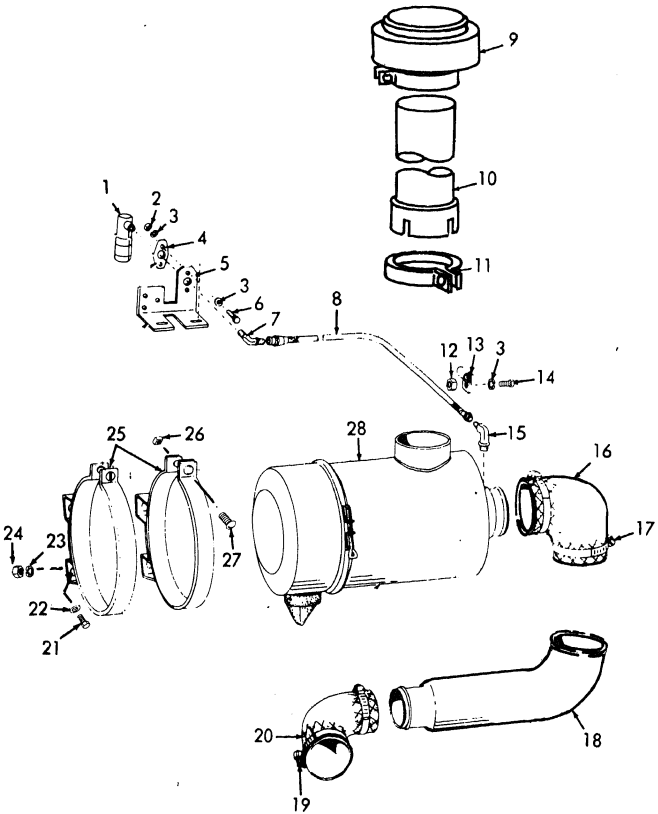

ME 3805-239-34P/38

Figure 38. Air Cleaner and Indicator

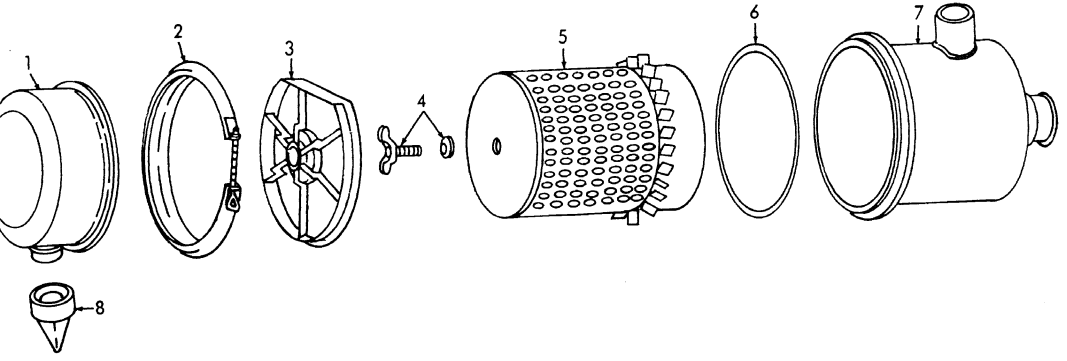

ME 3805-239-34P/39

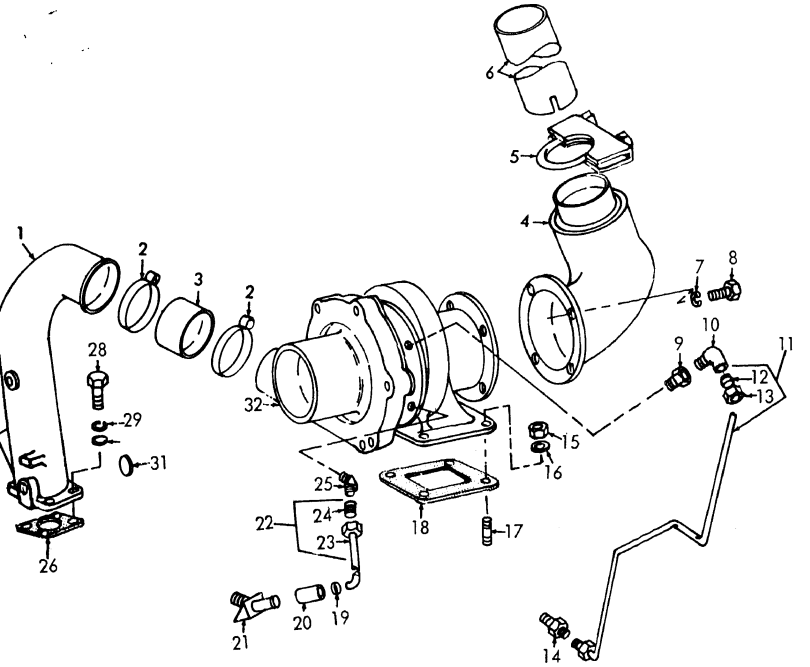

ME 3805-239-34P/40

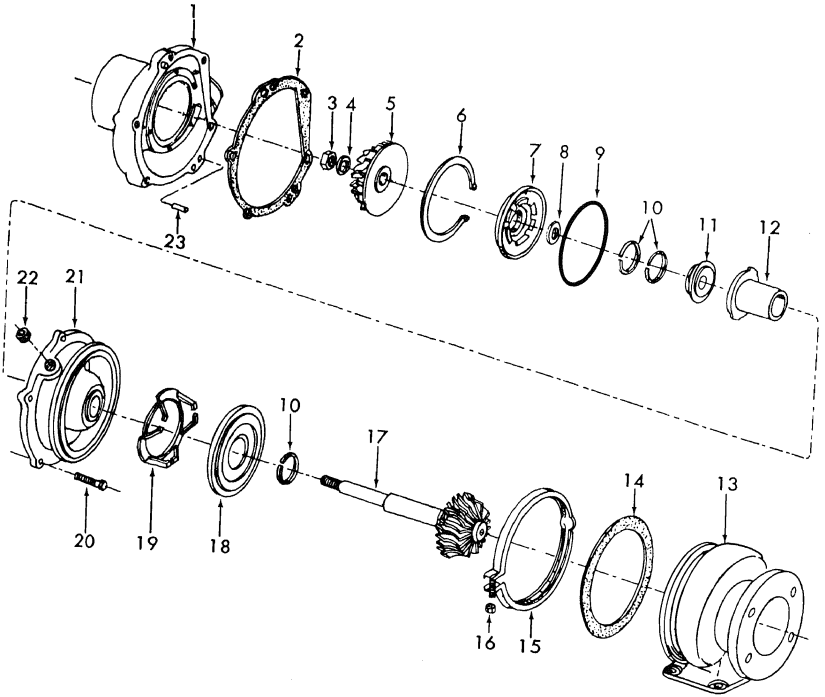

ME 3805-239-34P/41

Figure 41. Turbocharger

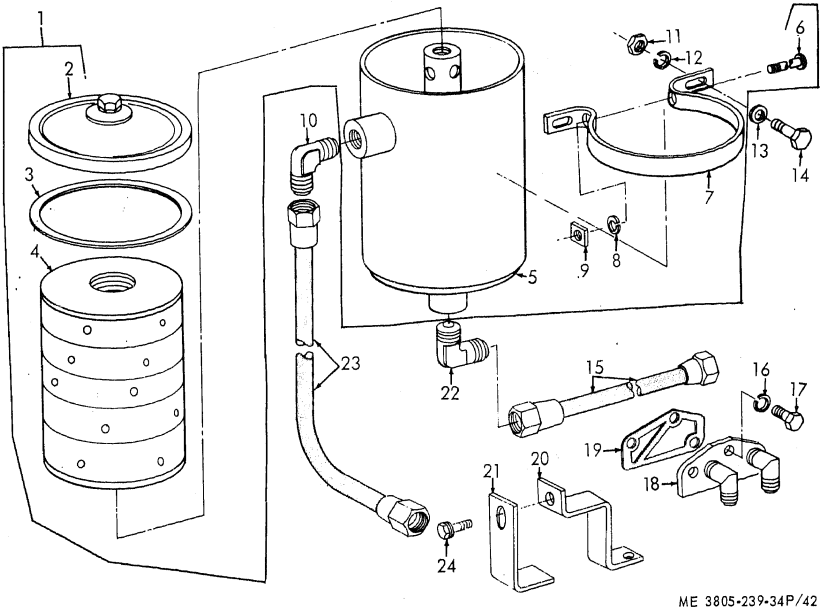

Figure 42. Oil Filter

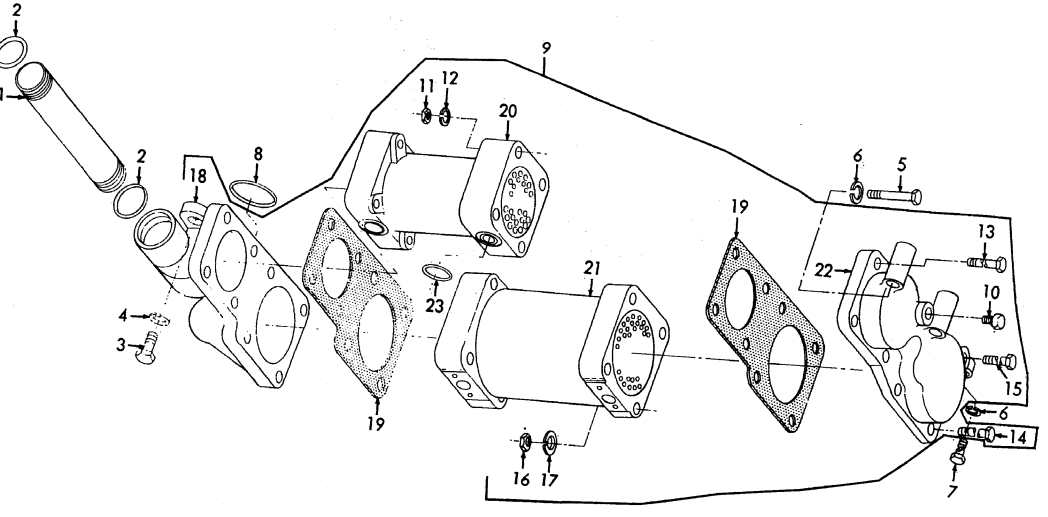

ME 3805-239-34P/43

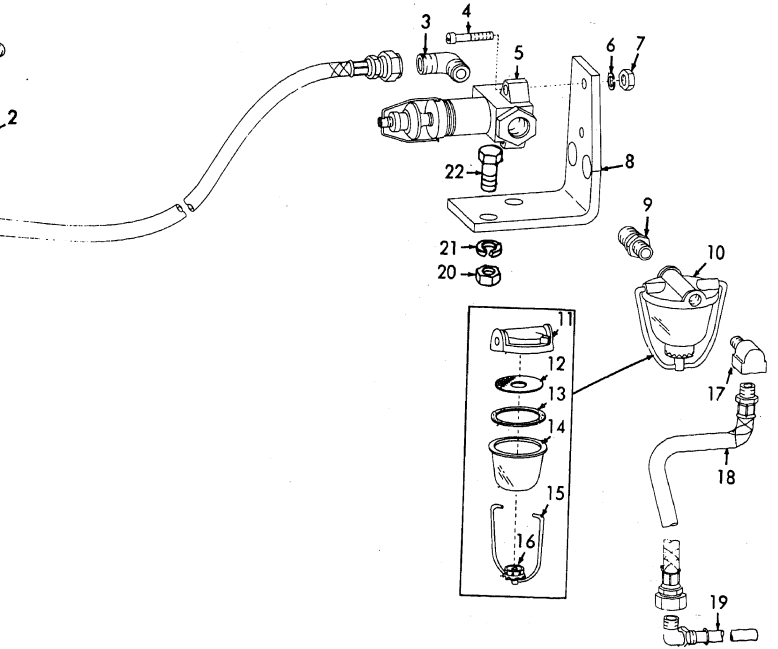

Figure 44. Fuel Filter, Primer and Lines

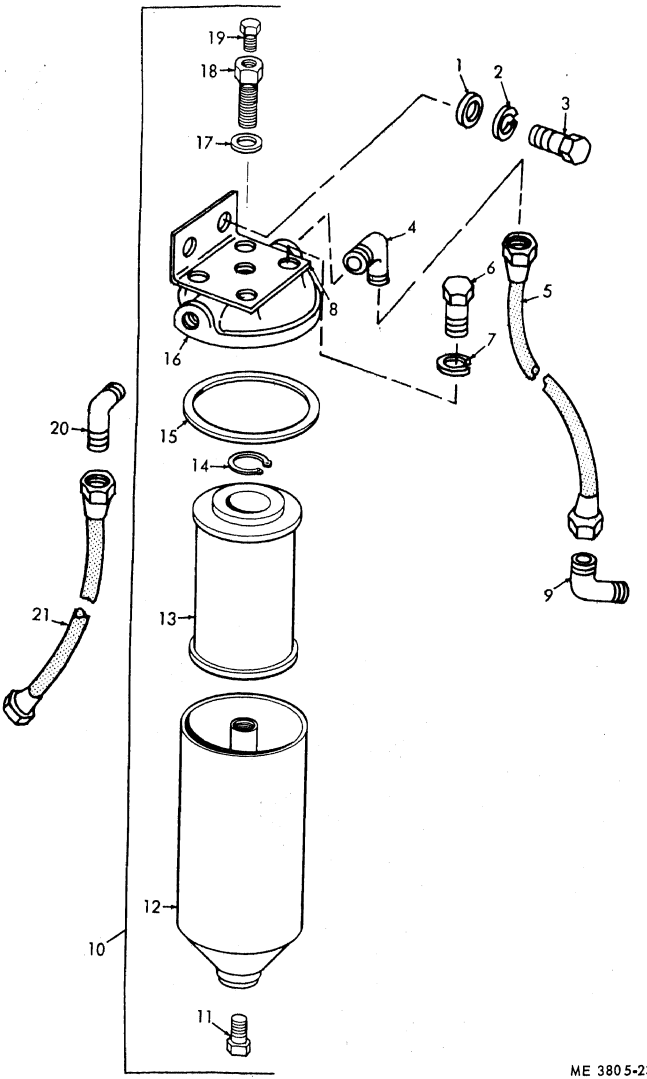

ME 3805-239-34P/45

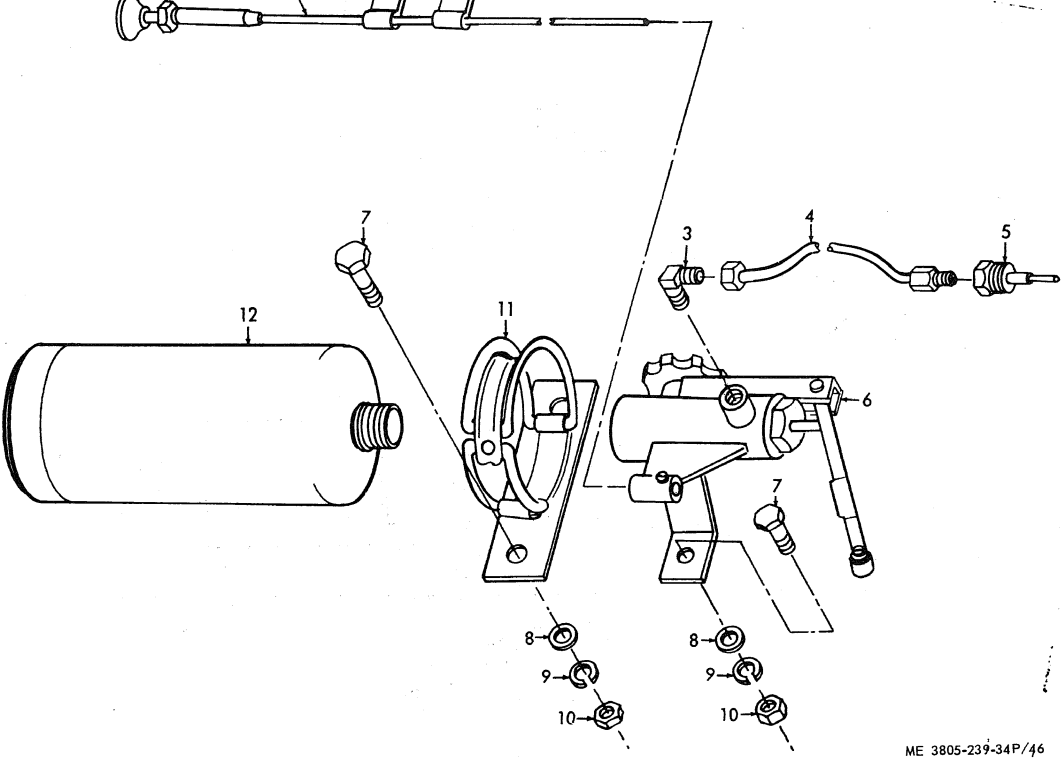

Figure 46. Priming System

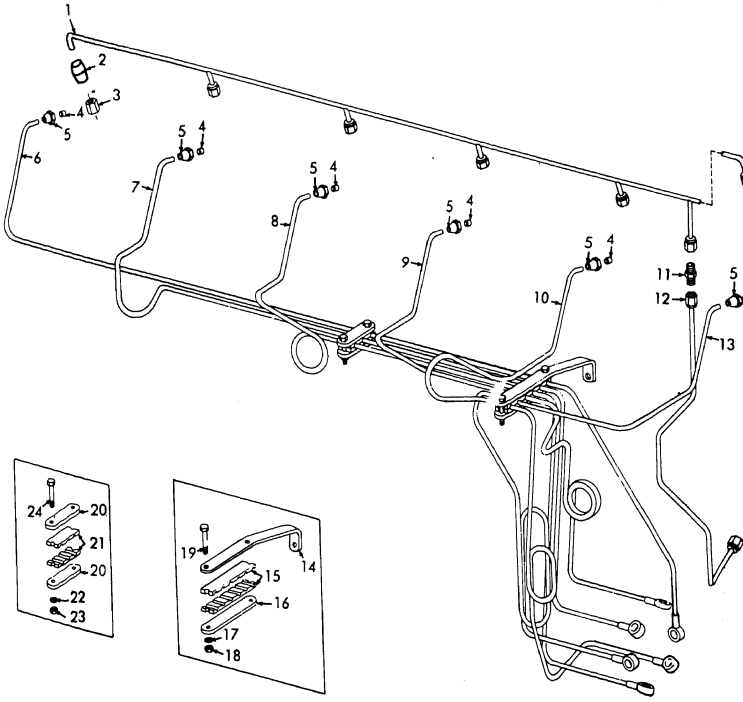

ME 3805-239-34

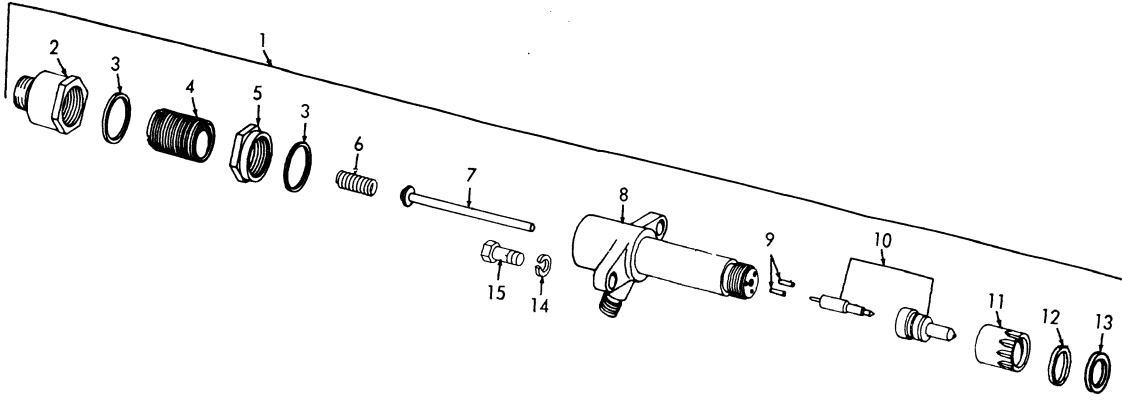

ME 3805-239-34P/48

Figure 48. Fuel Injector

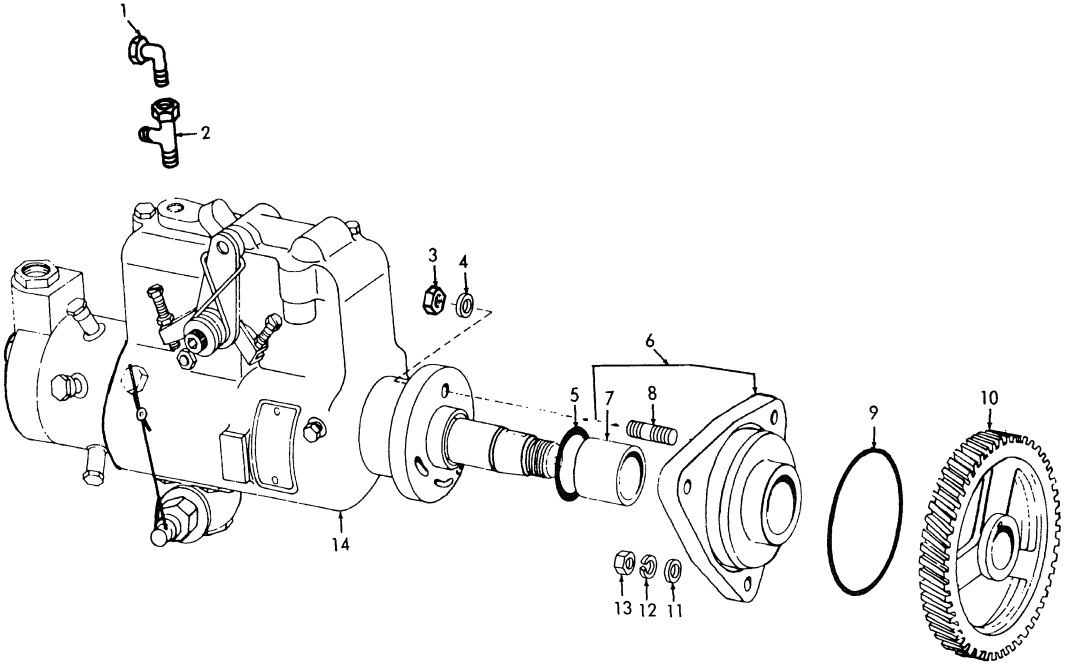

ME 3805-239-34P/49

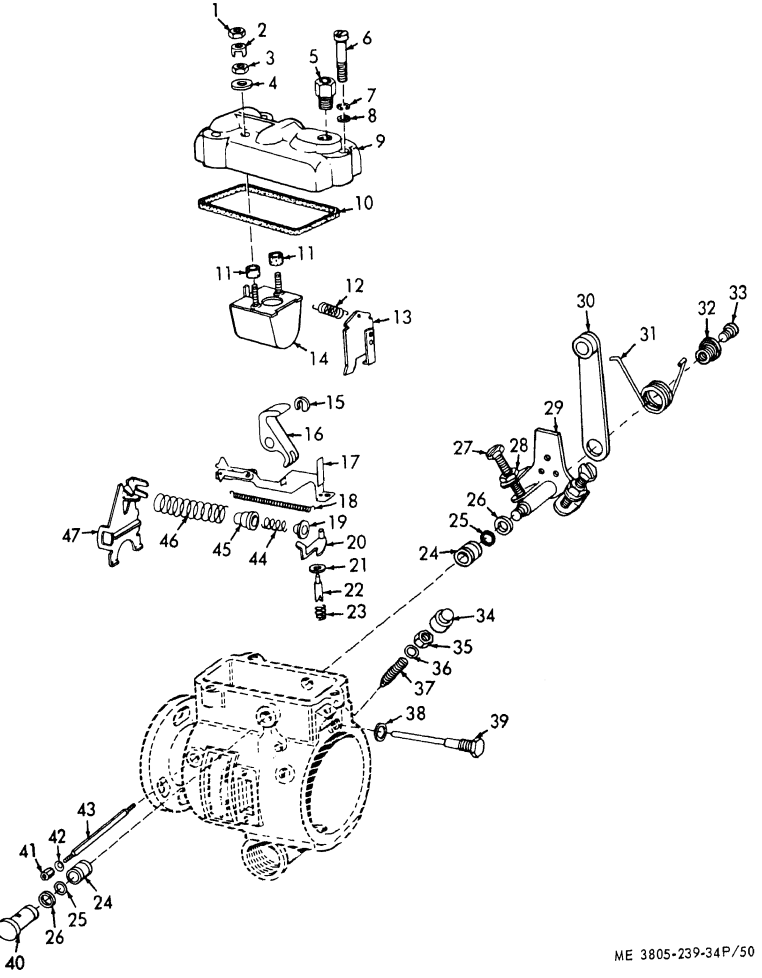

Figure 50. Fuel Injection Pump Throttle Lever and Governor Control

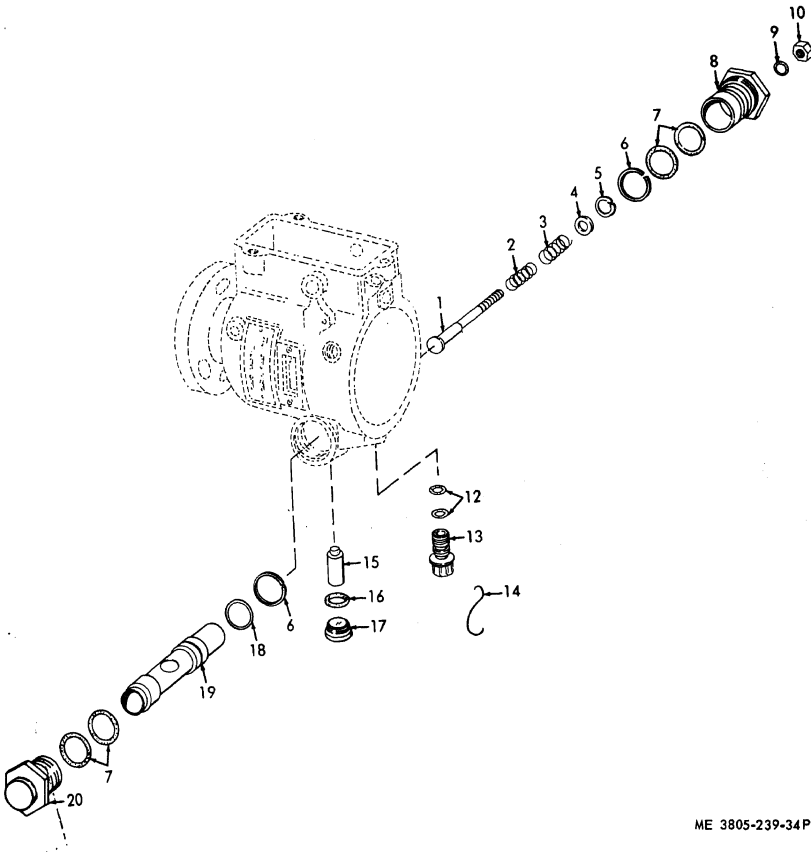

Figure 51. Fuel Injection Pump Automatic Advance

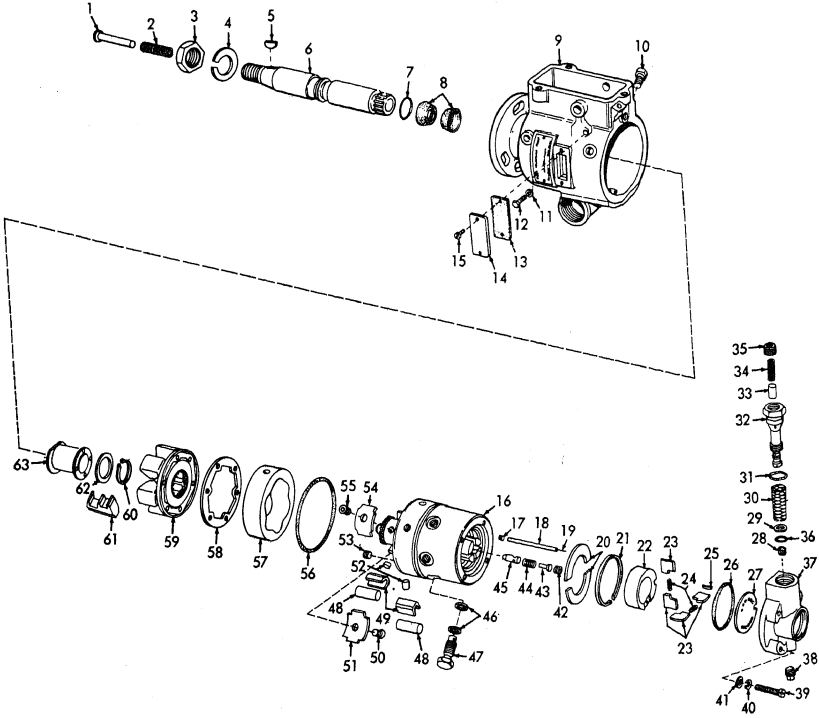

ME 3805-239-34P/

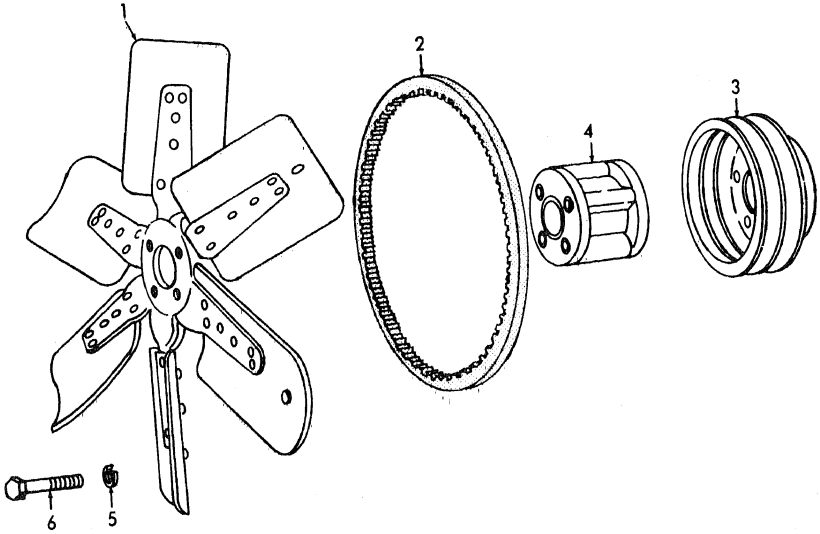

ME 3805-239-34P/53

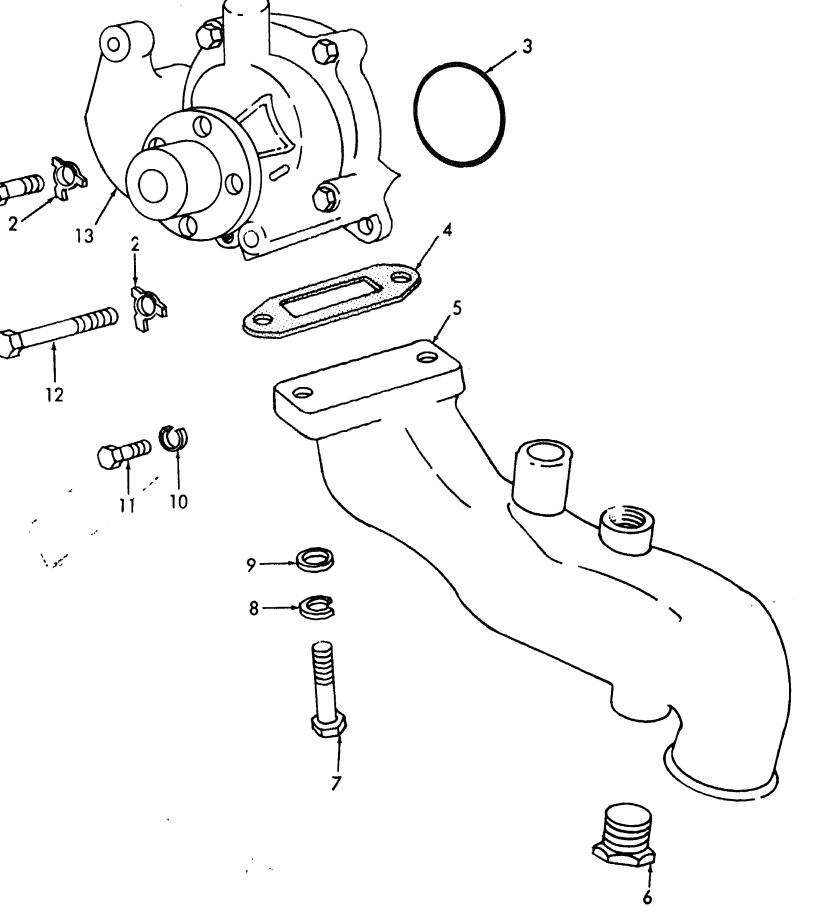

Figure 54. Water Pump and Inlet Pipe

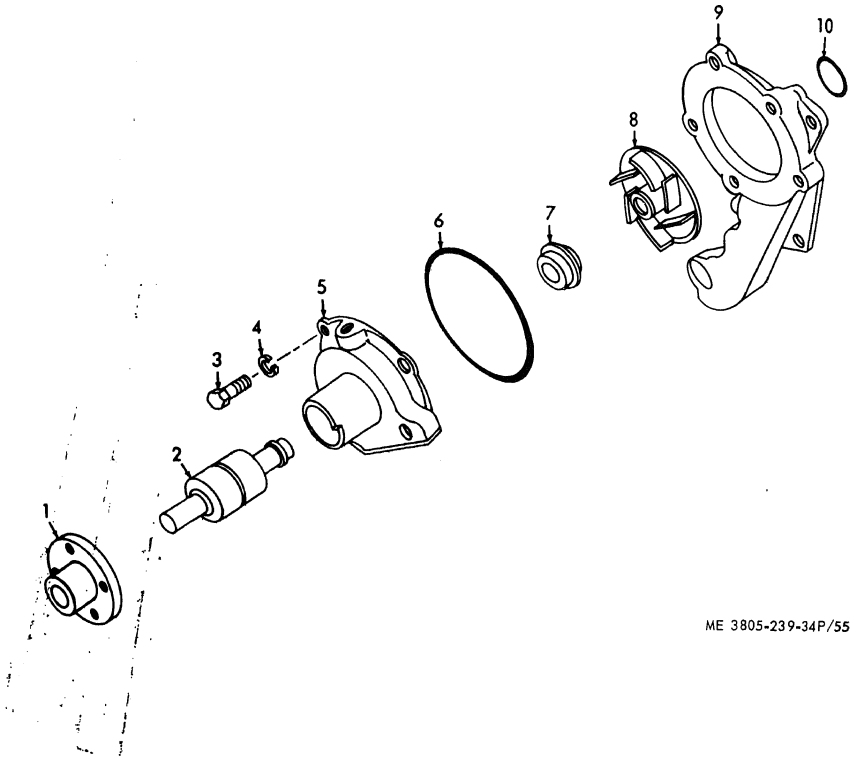

ME 3805-239-34P/55

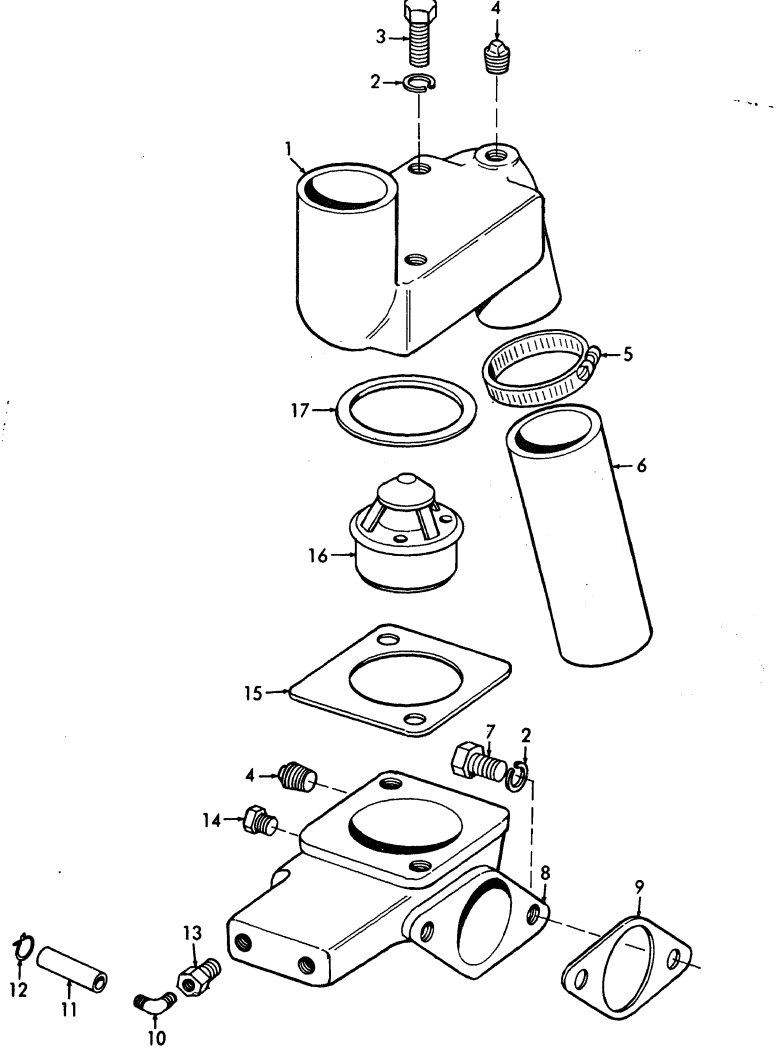

Figure 56. Thermostat and Housing

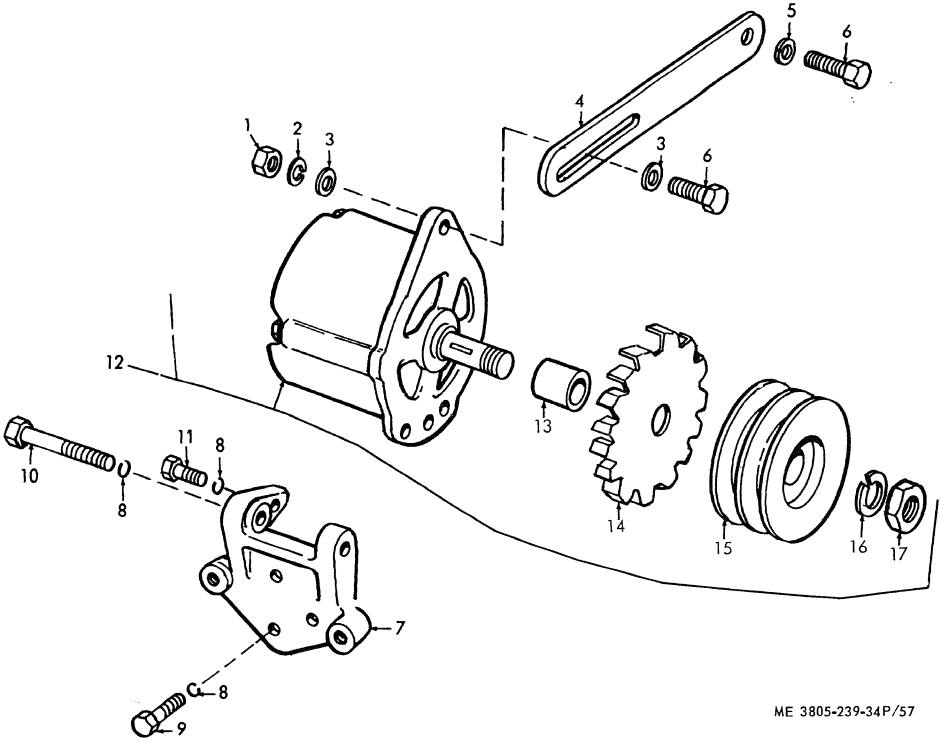

ME 3805-239-34P/57

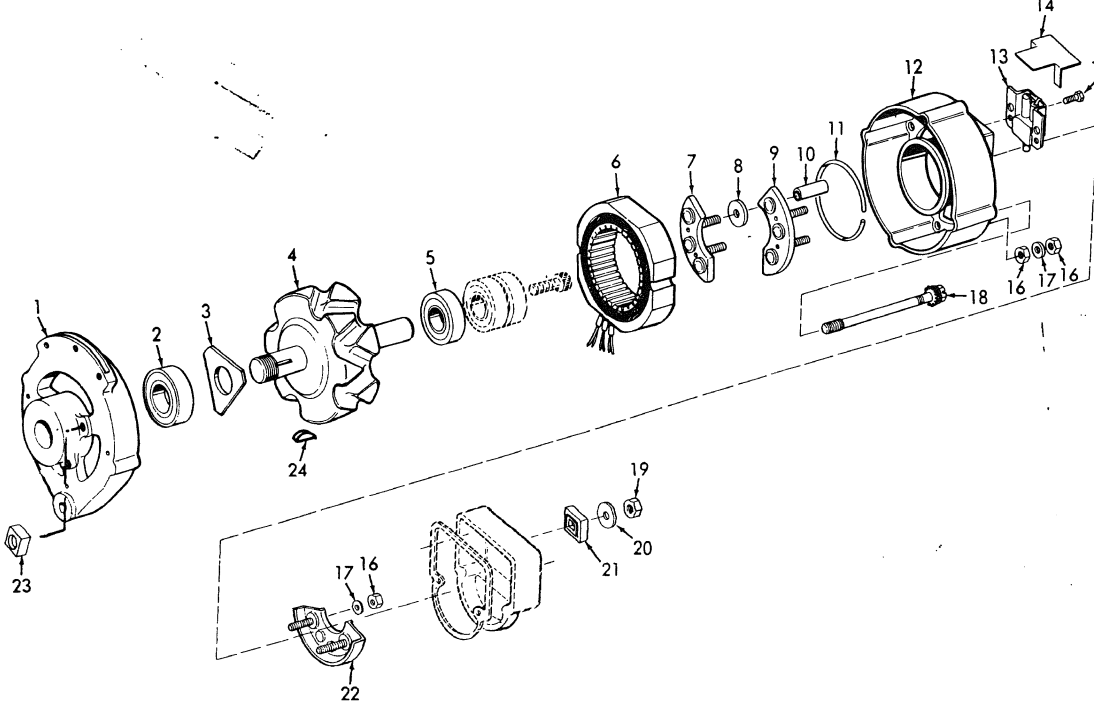

ME 3805-239-34P/58

Figure 58. Alternator

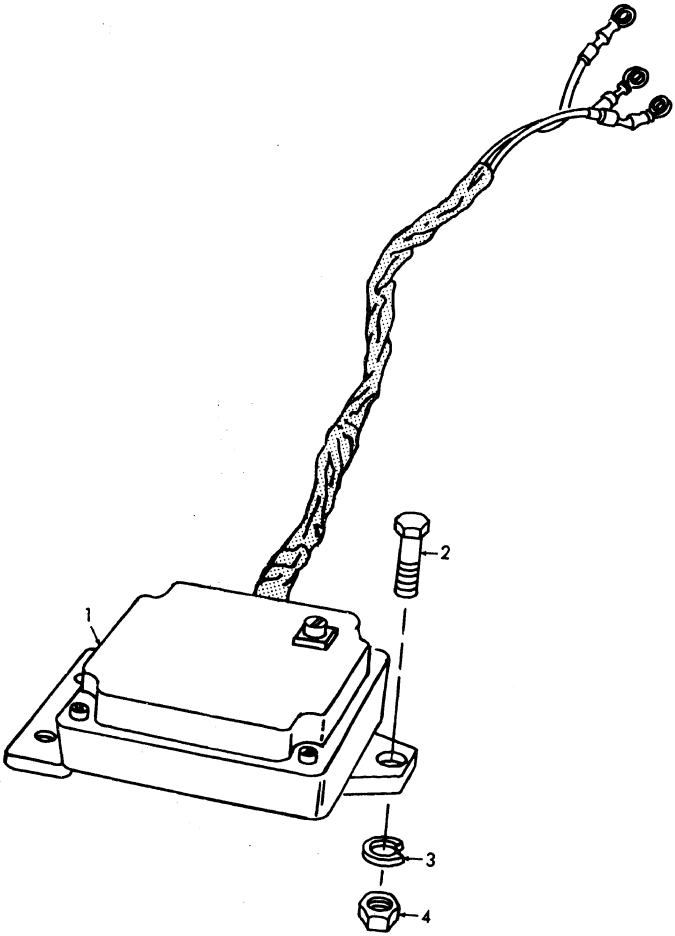

ME 3805-239-34P/59

Figure 59. Regulator

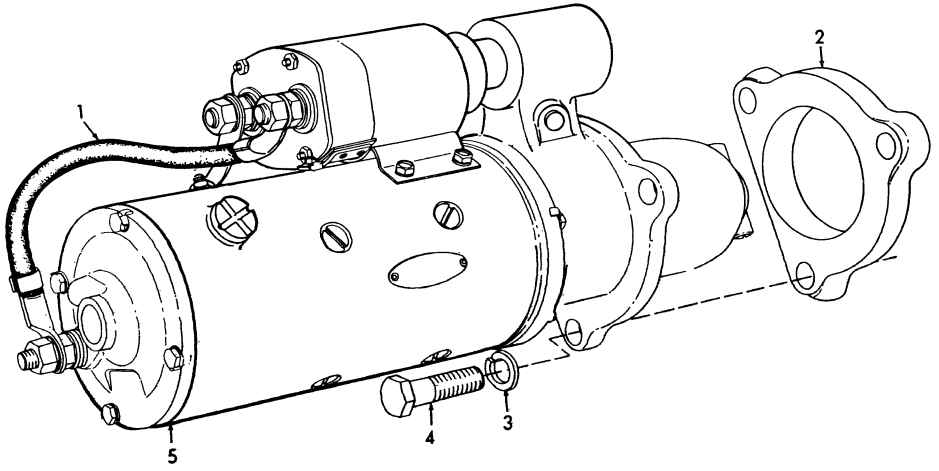

ME 3805-239-34P/60

Figure 60. Starter

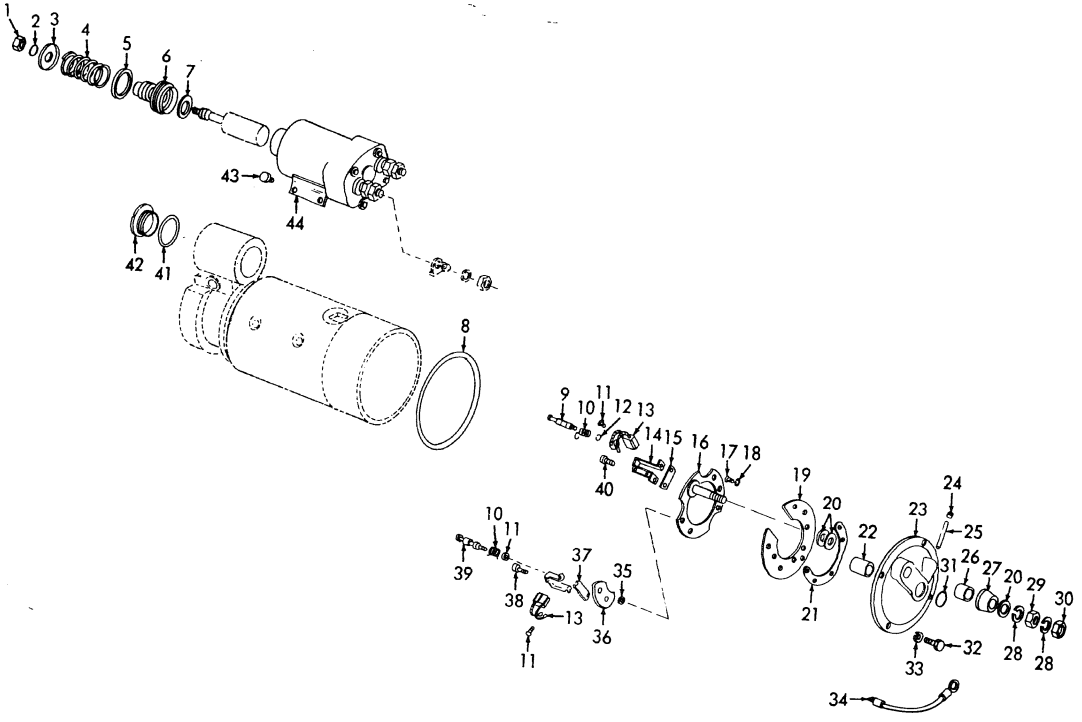

ME 3805-239-34P/61

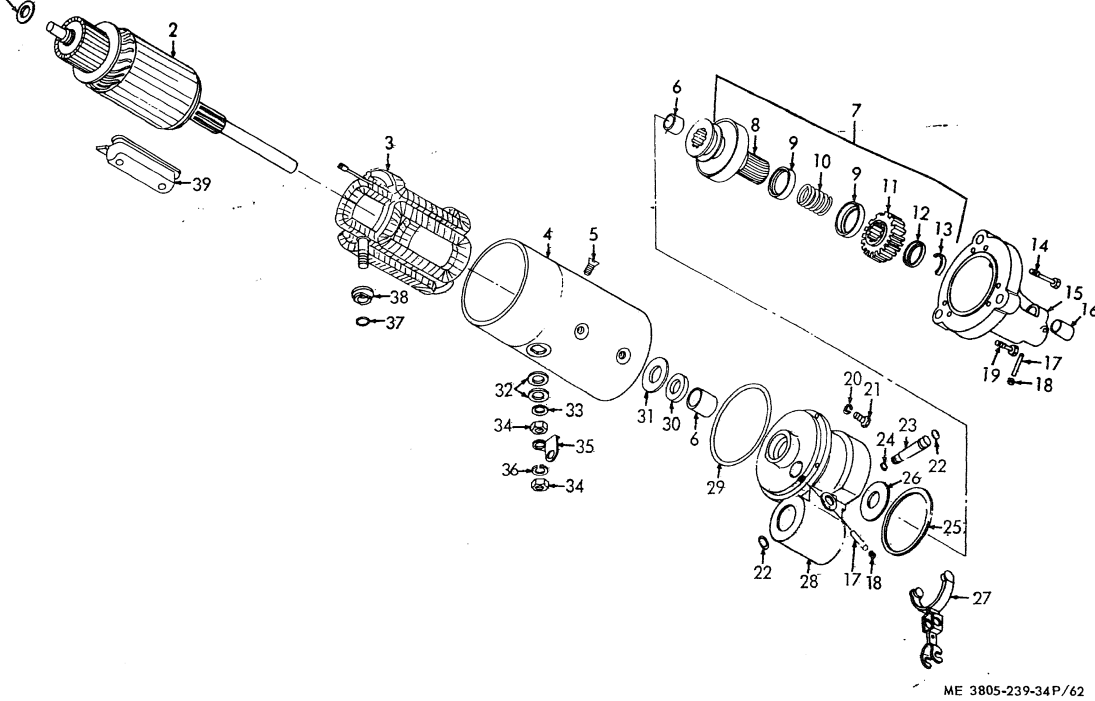

Figure 62. Starter Drive End and Armature

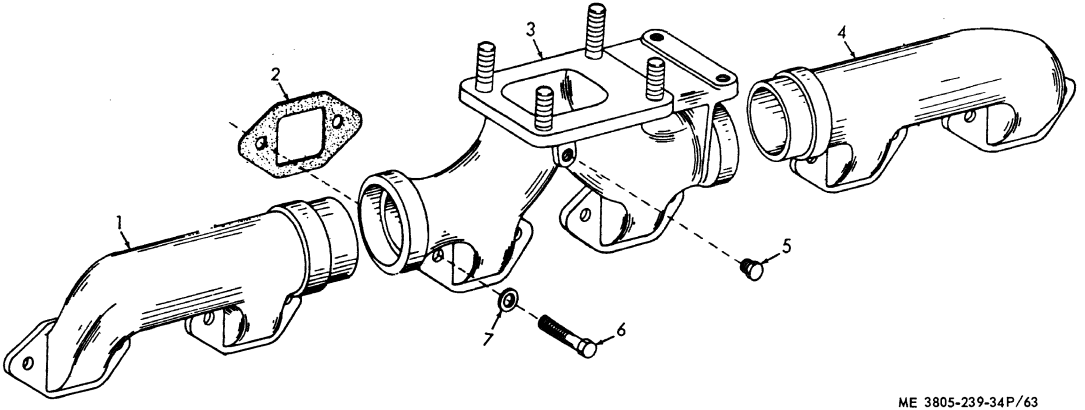

ME 3805-239-34P/63

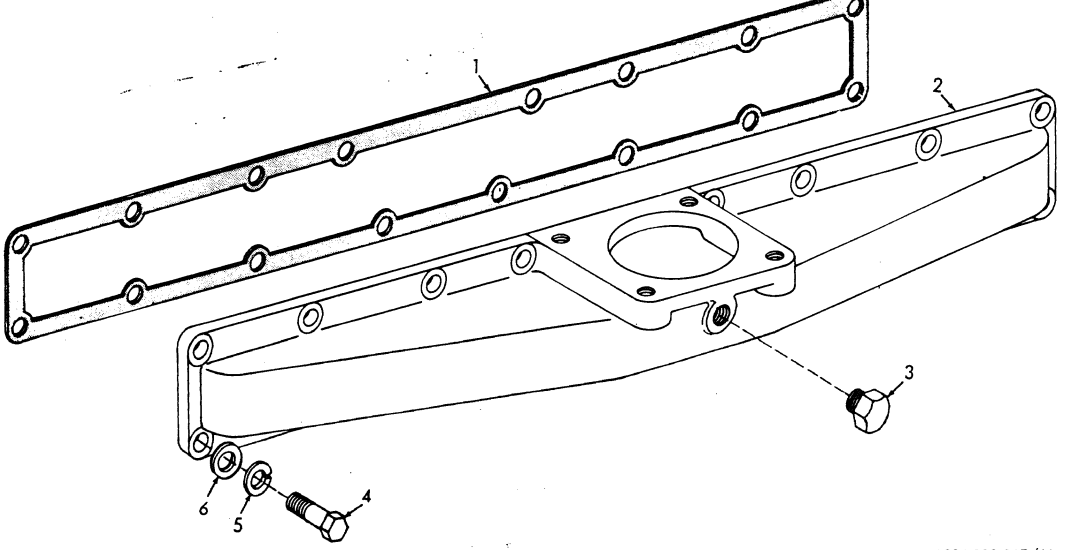

ME 3805-239-34P/64

Figure 64. Intake Manifold

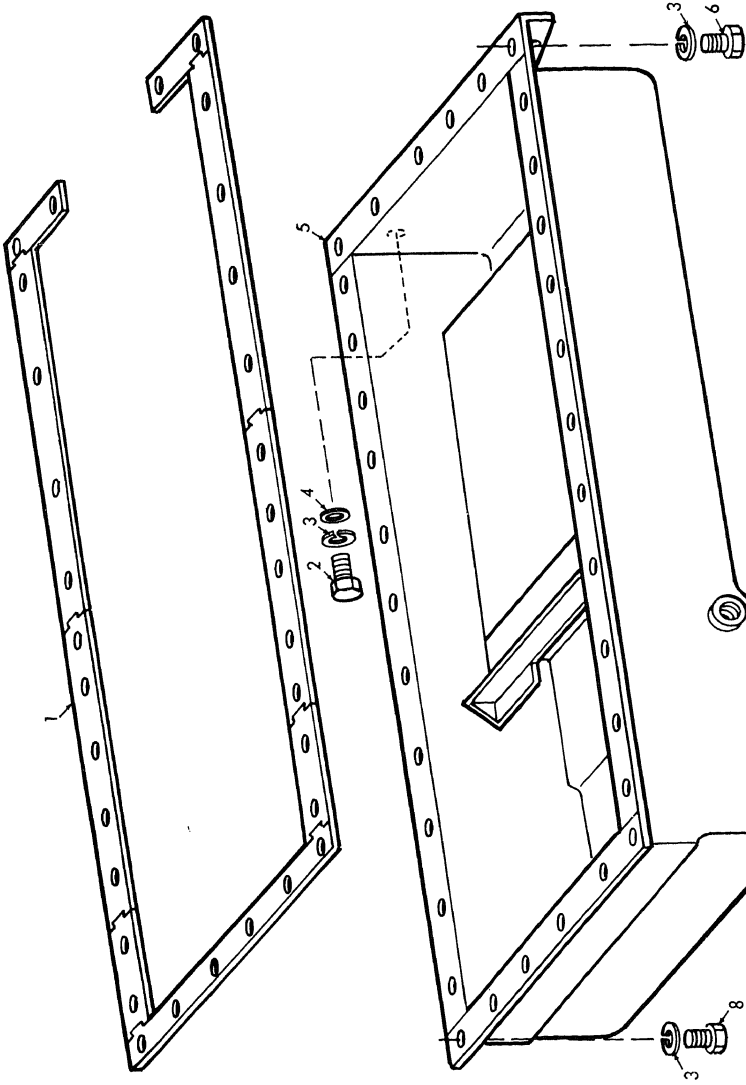
1
2
3
4
5
6
7
8

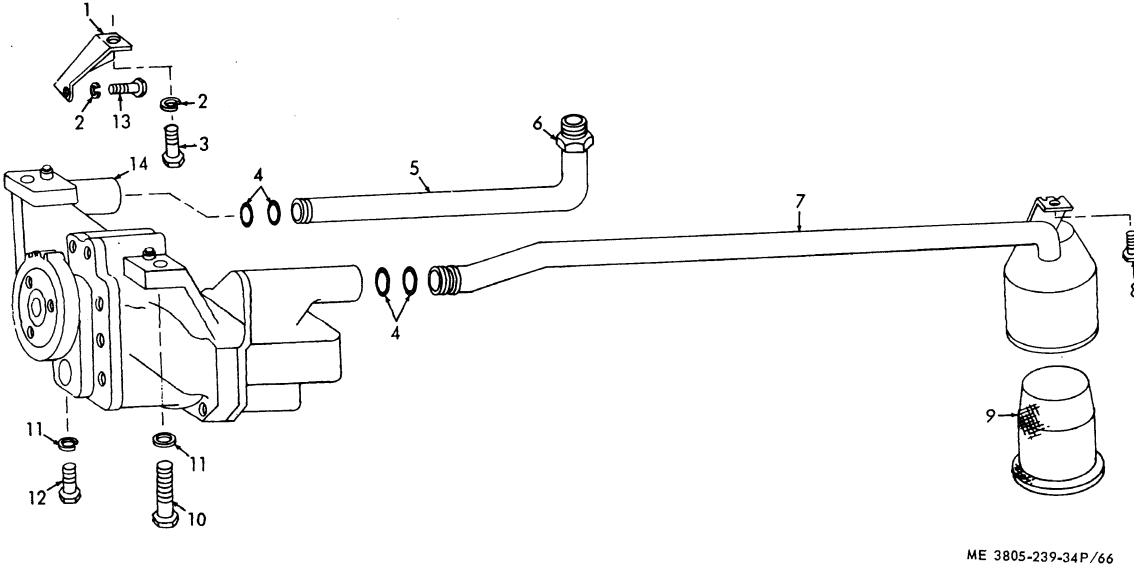

Figure 66. Oil Pump and Lines

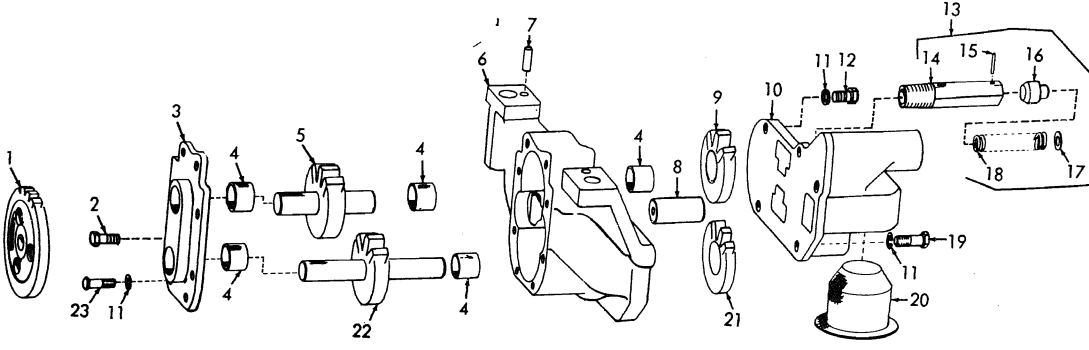

ME 3805-239-34P/67

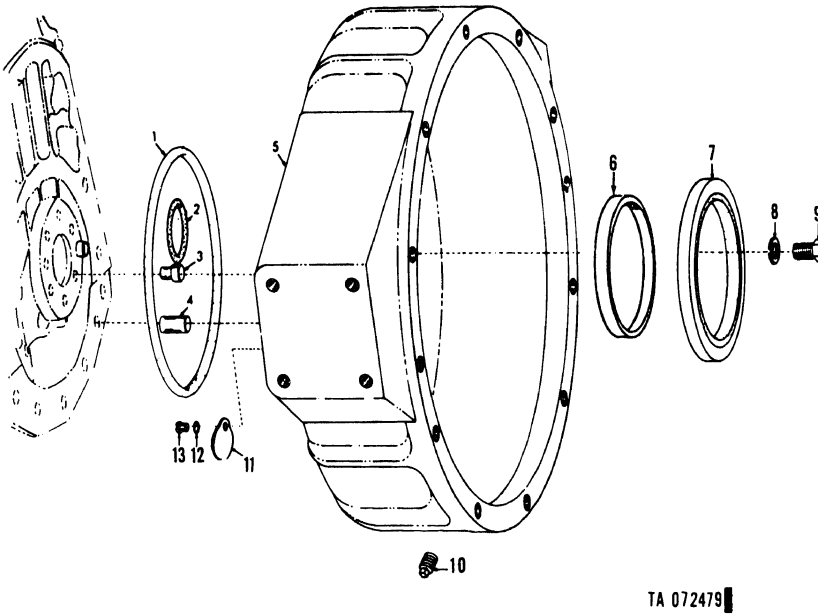

Figure 68. Flywheel housing.

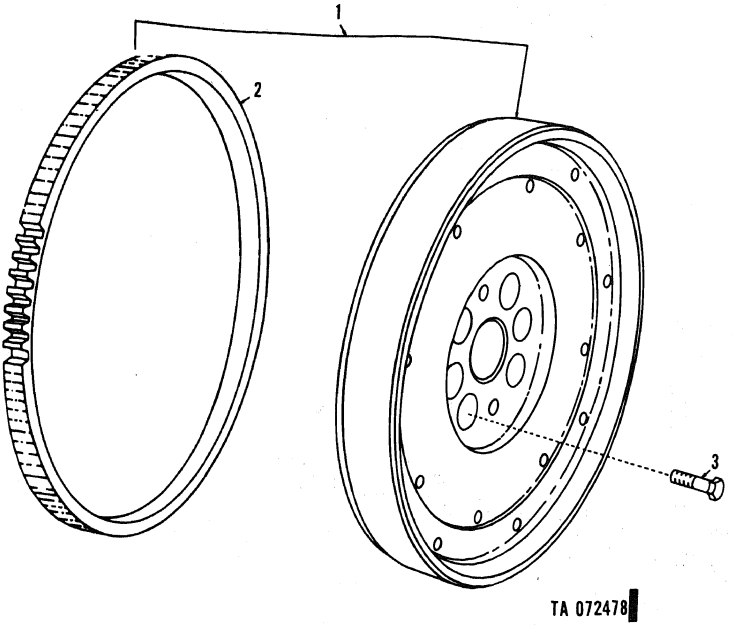

Figure 69. Flywheel and ring gear.

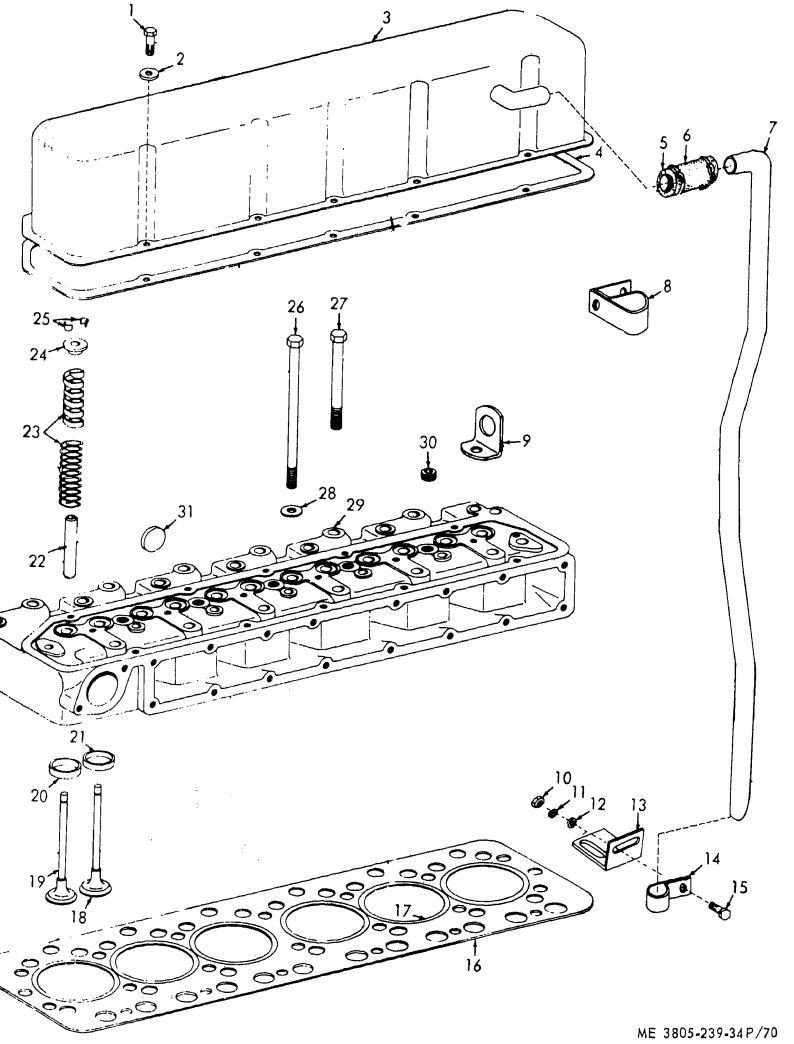

Figure 70. Cylinder Head, Valves and Cover

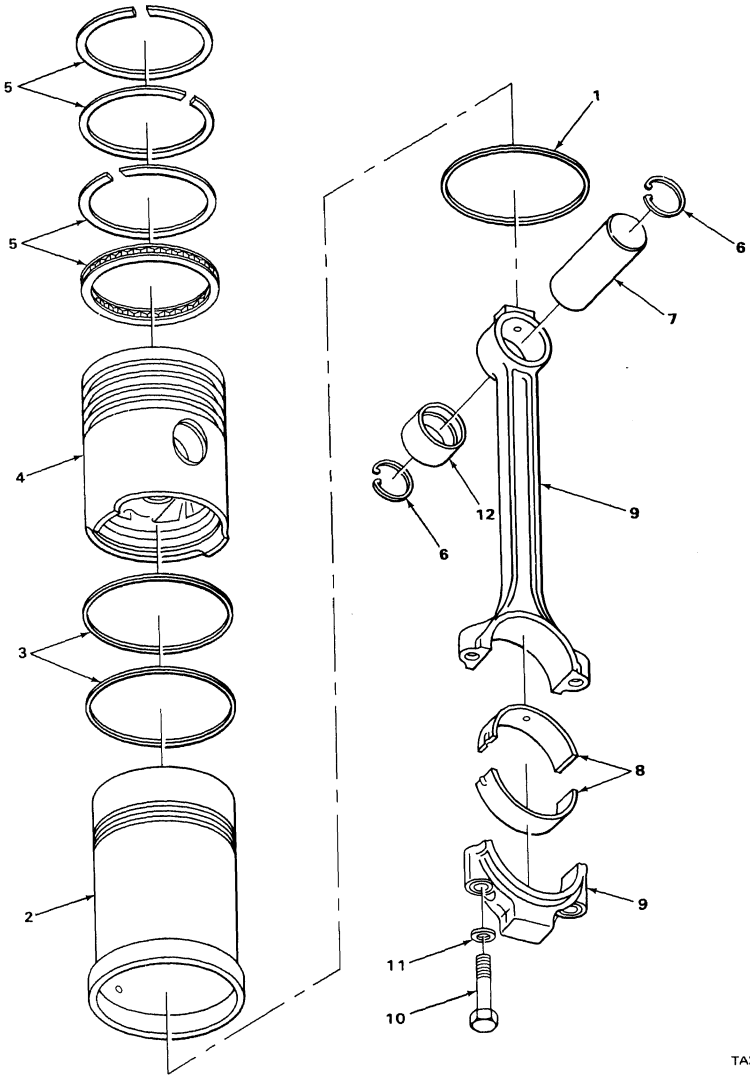

TA220

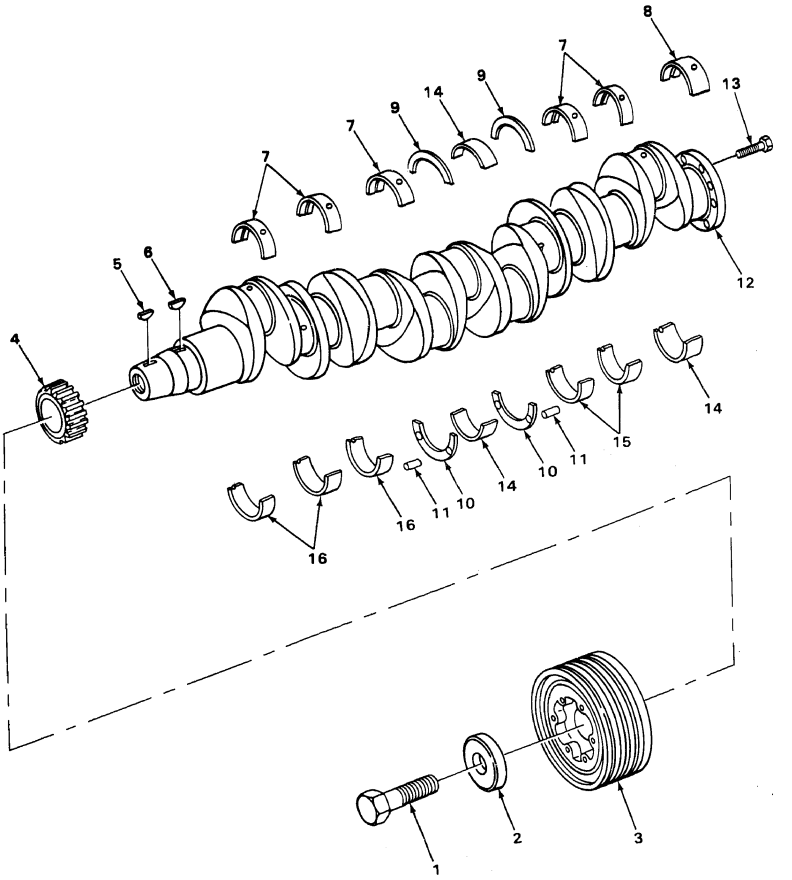

TA220106

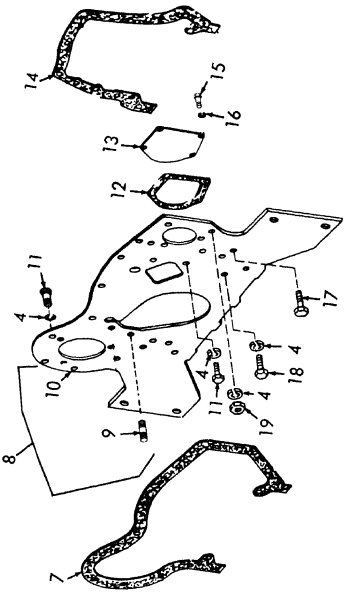

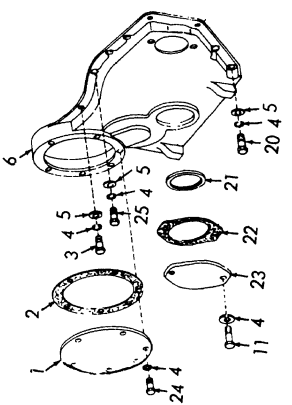

ME 3805-239-34P/73

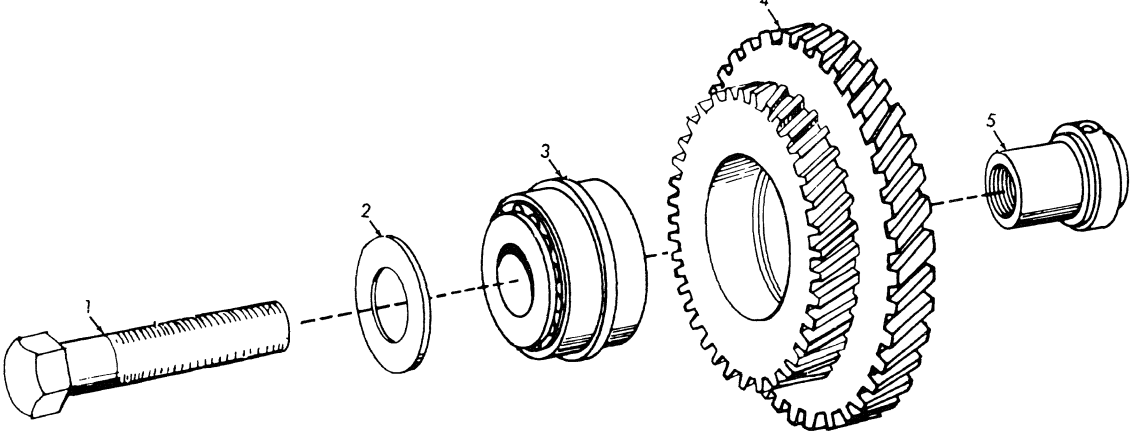

ME 3805-239-34P/74

Figure 74. Idler Gear

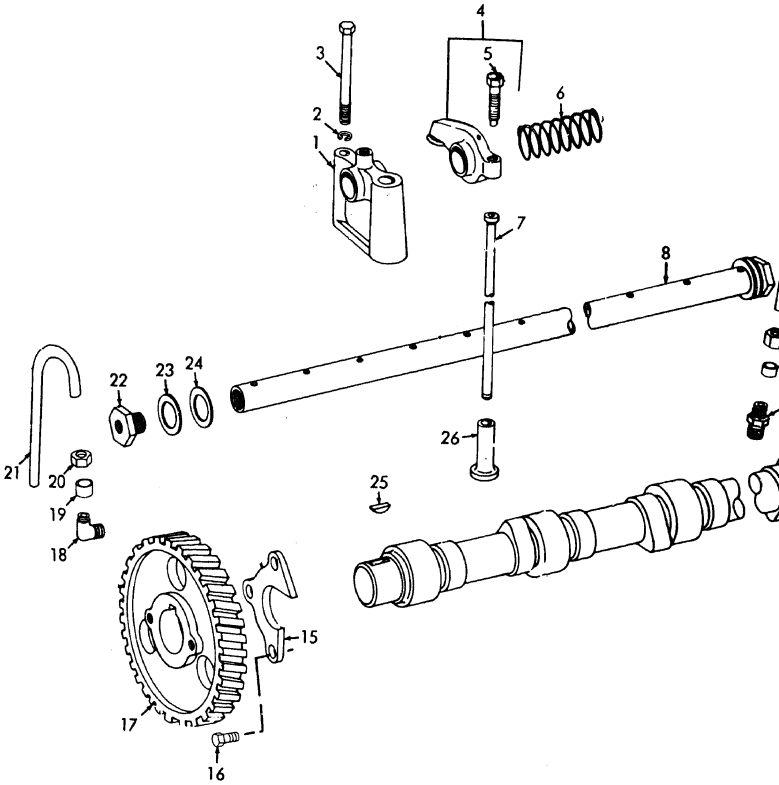

ME 3805-239.

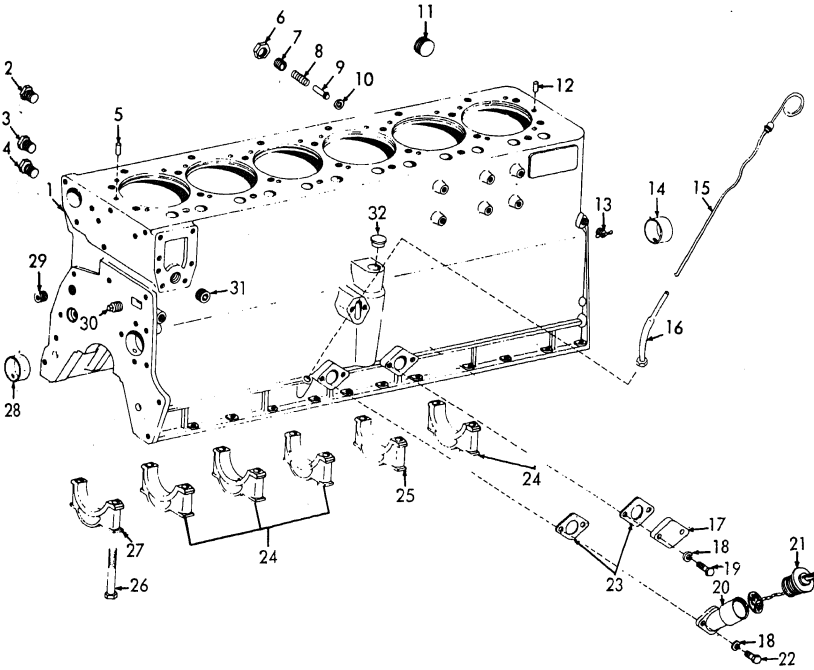

Figure 76. Cylinder Block

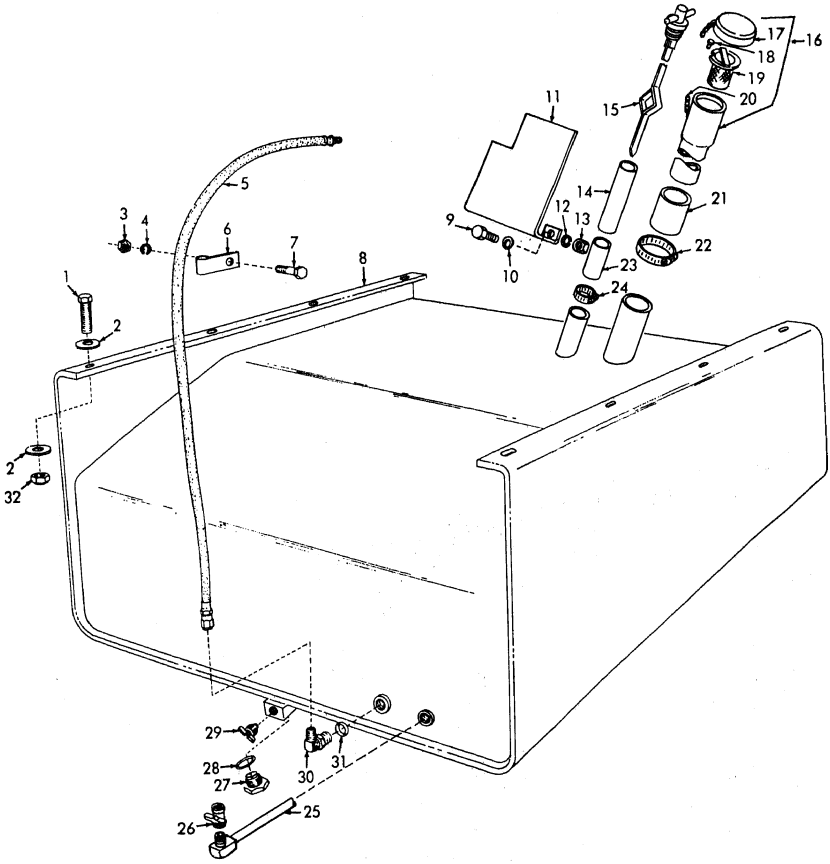

ME 3805-239-34P/77

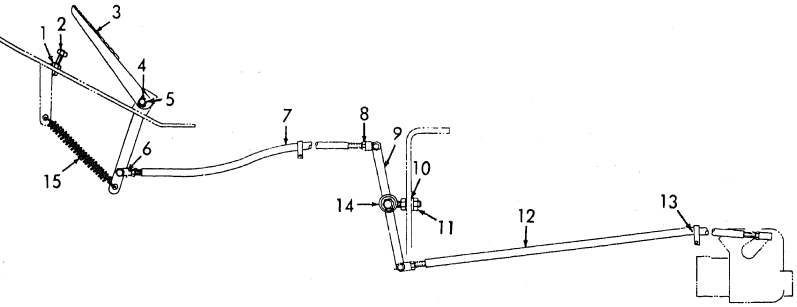

ME 380 5-239-34P/78

Figure 78. Throttle Control

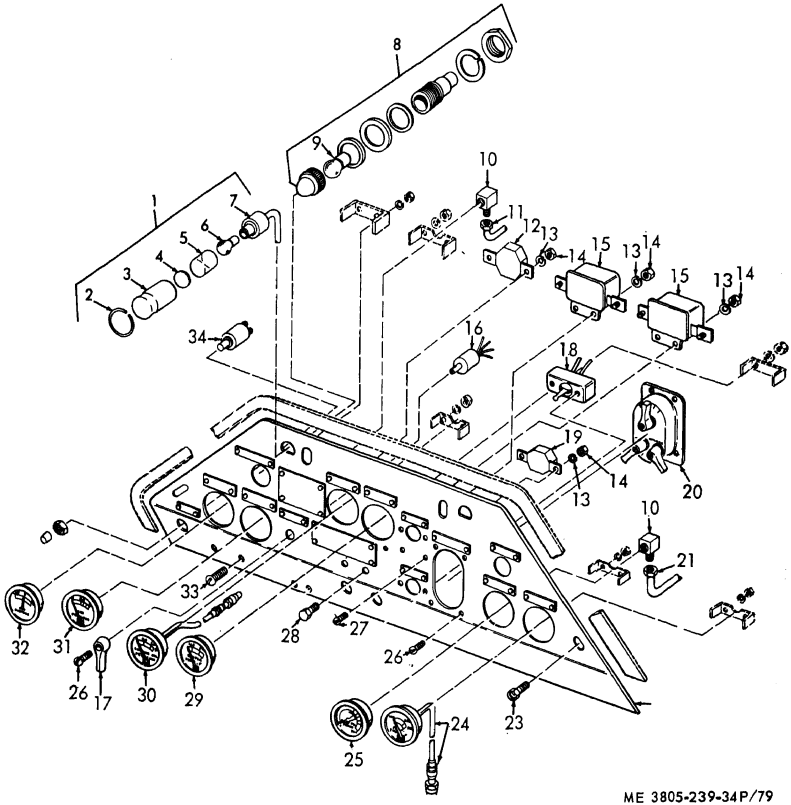

ME 3805-239-34P/79

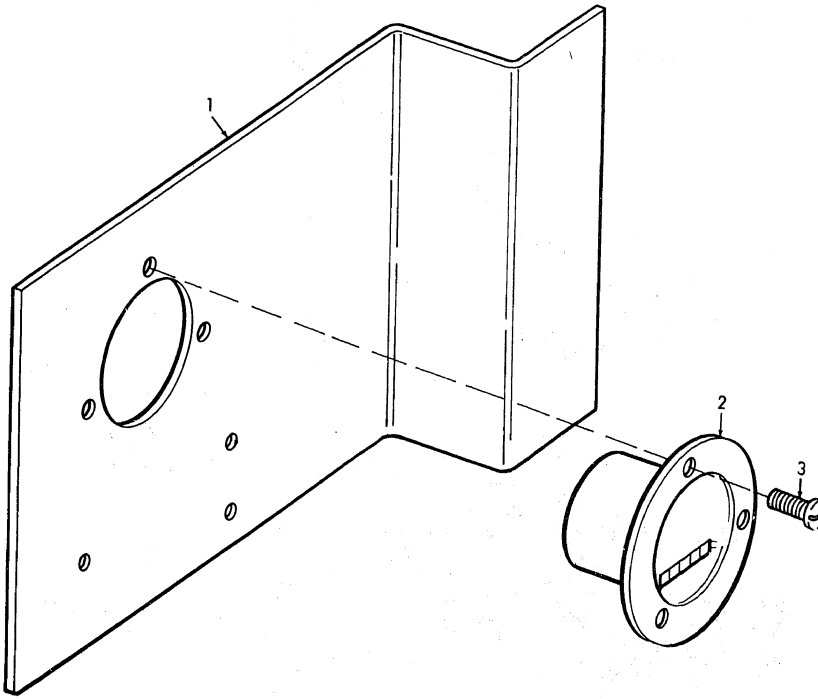

Figure 80. Hourmeter

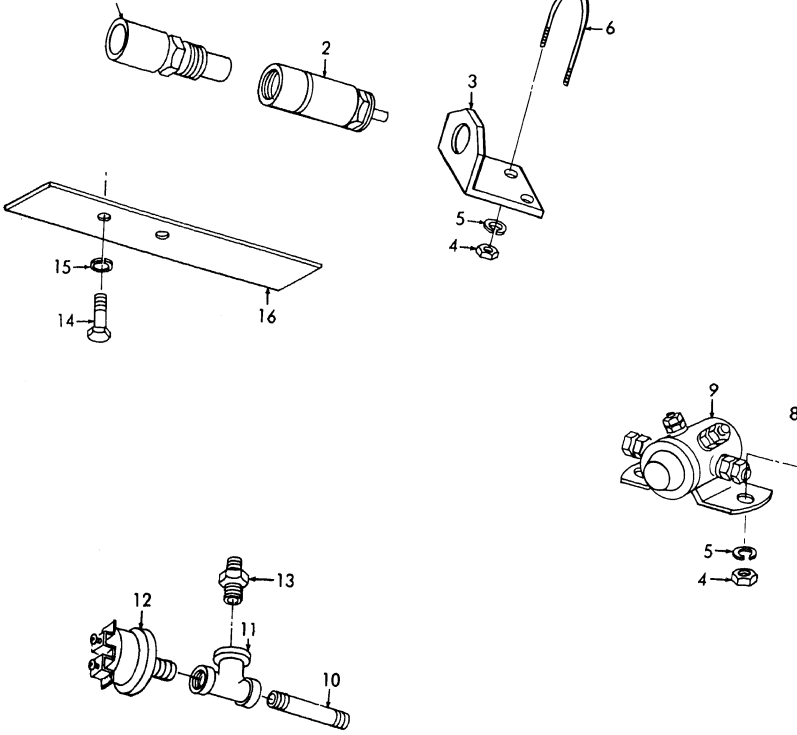

Figure 81. Starting Switch, Solenoid and Pressure Switch

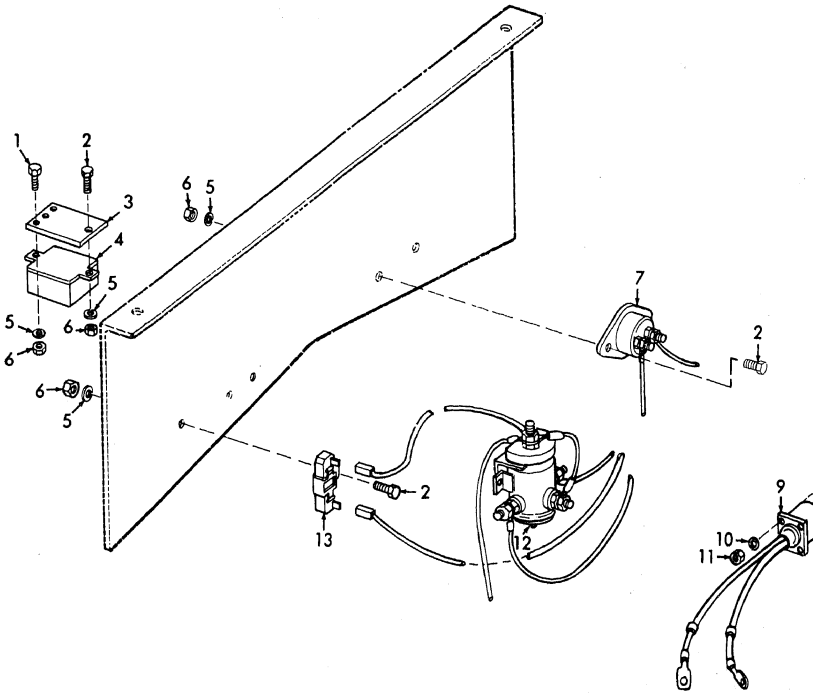

ME 3805-239-34P/82

Figure 82. Slave Receptacle, Polarity Protector, Resistor and Circuit Breaker

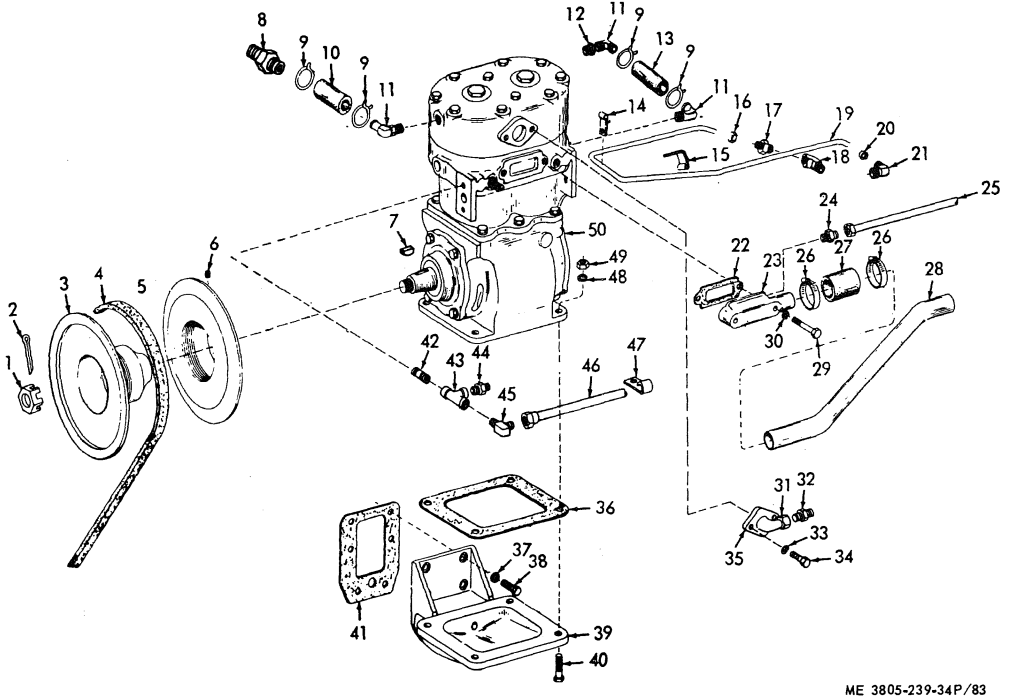

ME 3805-239-34P/83

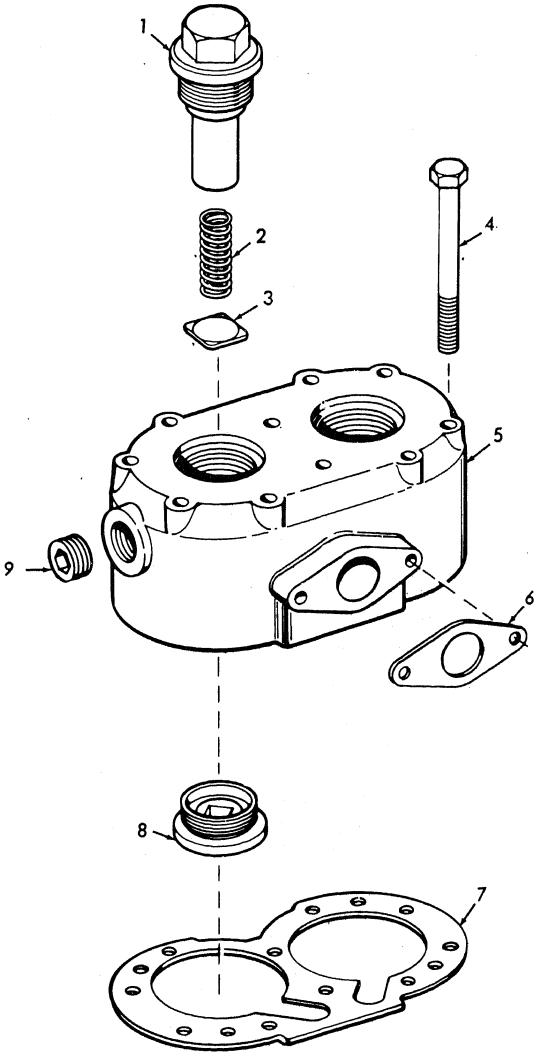

ME 3805-239-34P/84

Figure 84. Compressor Head and Valves

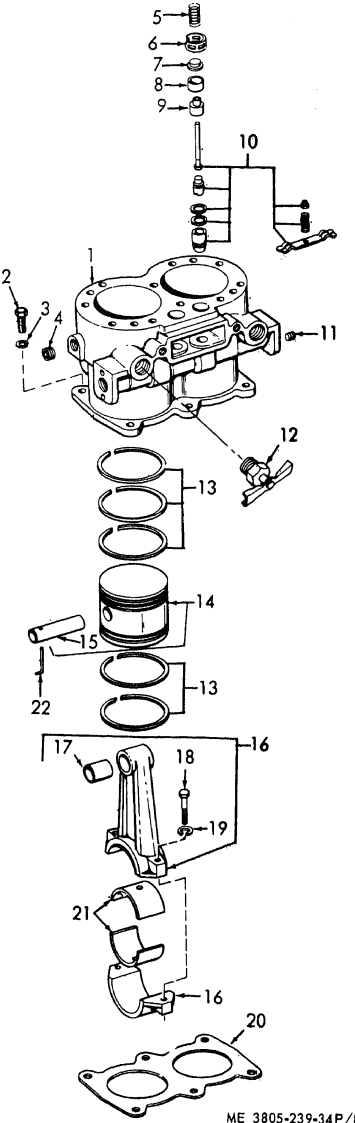

ME 3805-239-34P/85

Figure 85. C[illegible] Block and P[illegible]

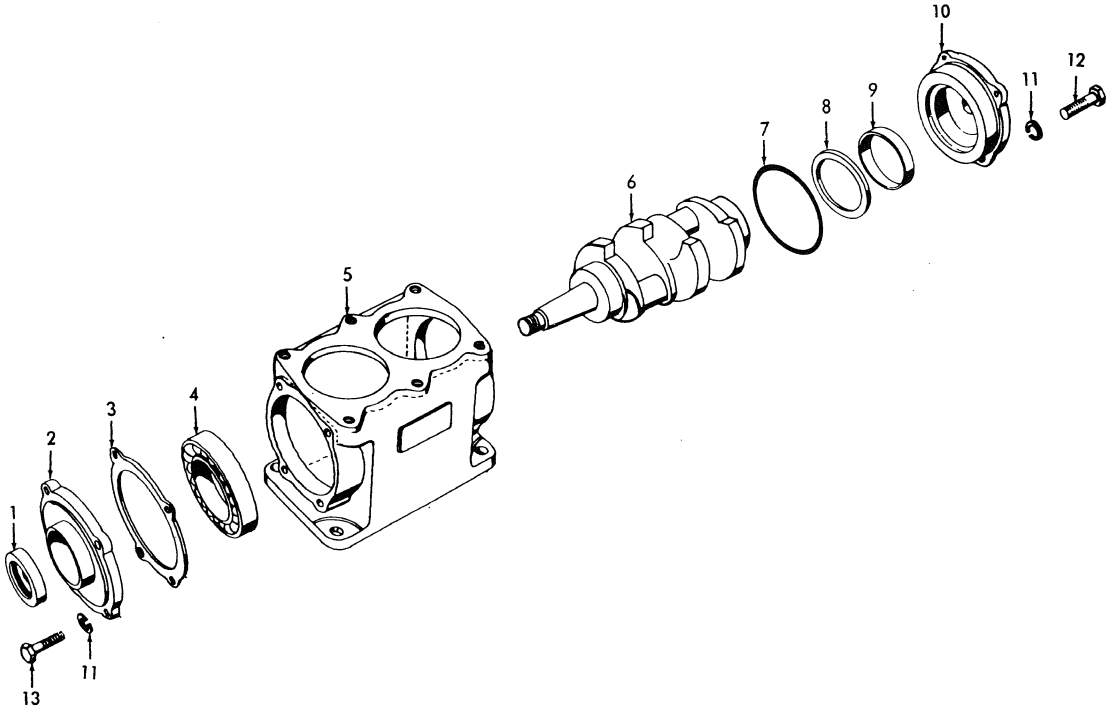

ME 3805-239-34P/86

Figure 86. Crankshaft and Housing

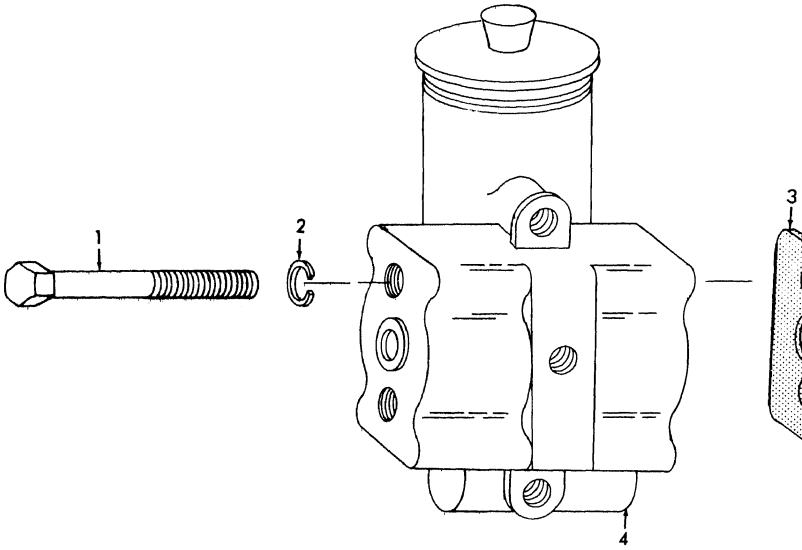

ME 3805-239-3

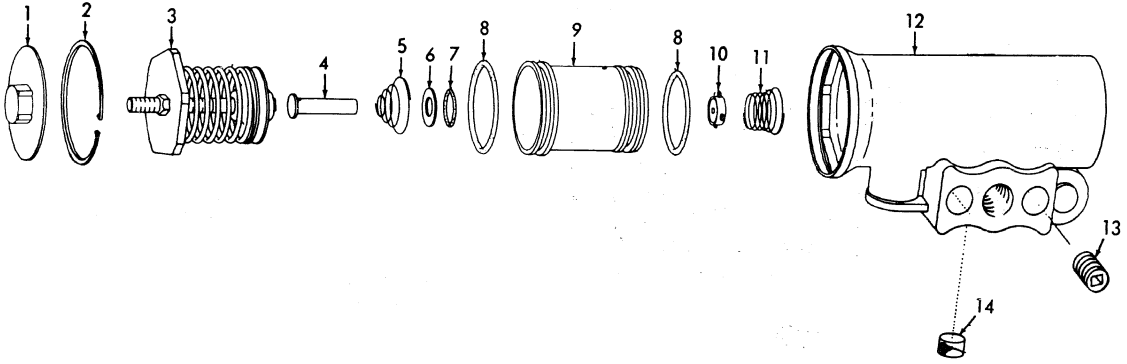

ME 3805-239-34P/88

Figure 88. Governor

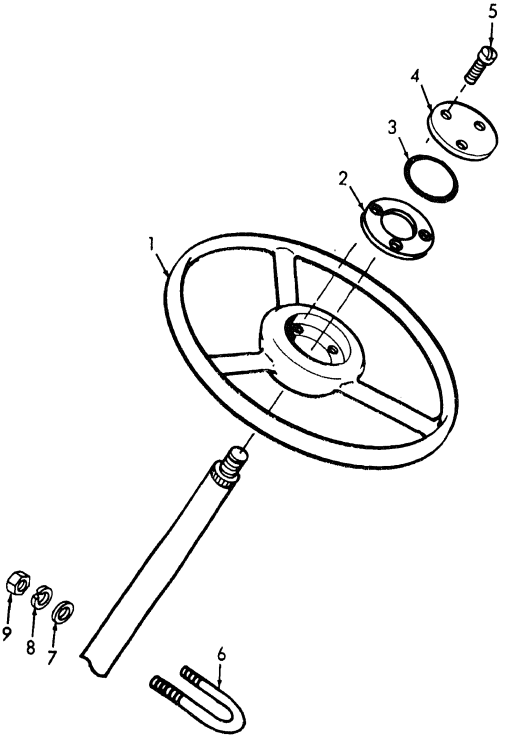

ME 3805-239-34P/89

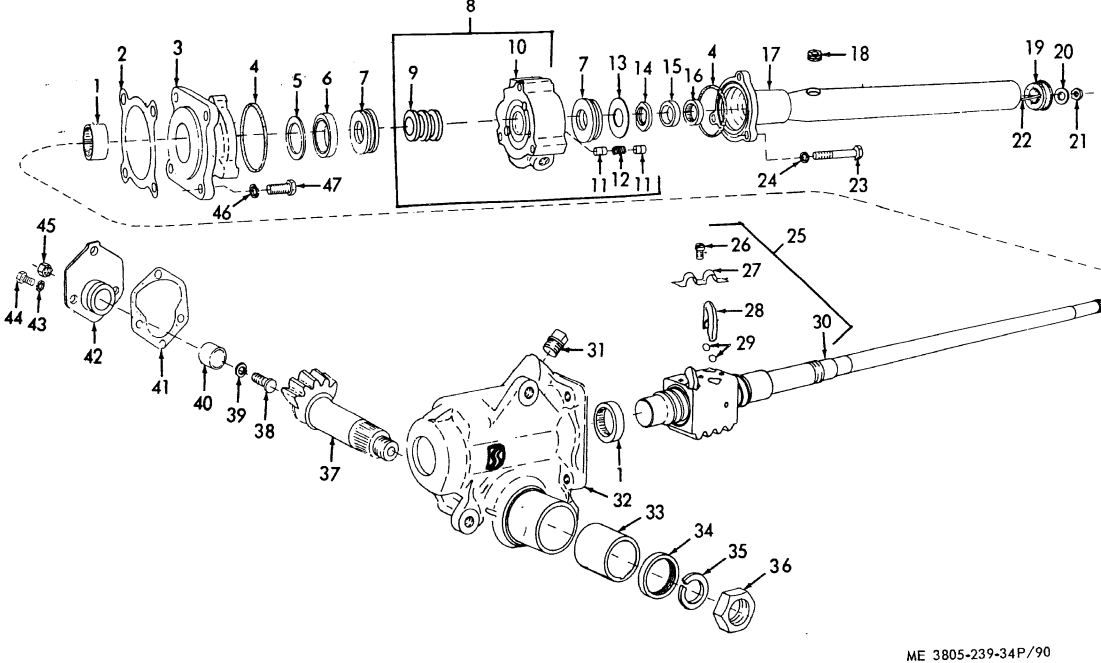

Figure 90. Steering Gear

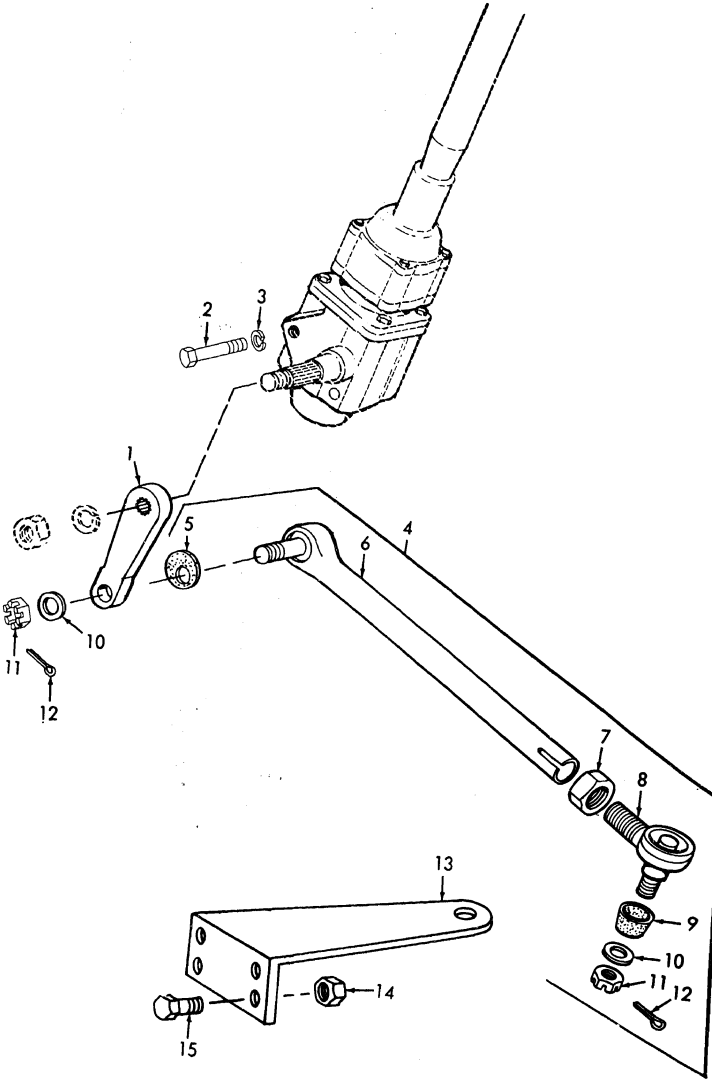

Figure 93. Steering Cylinder

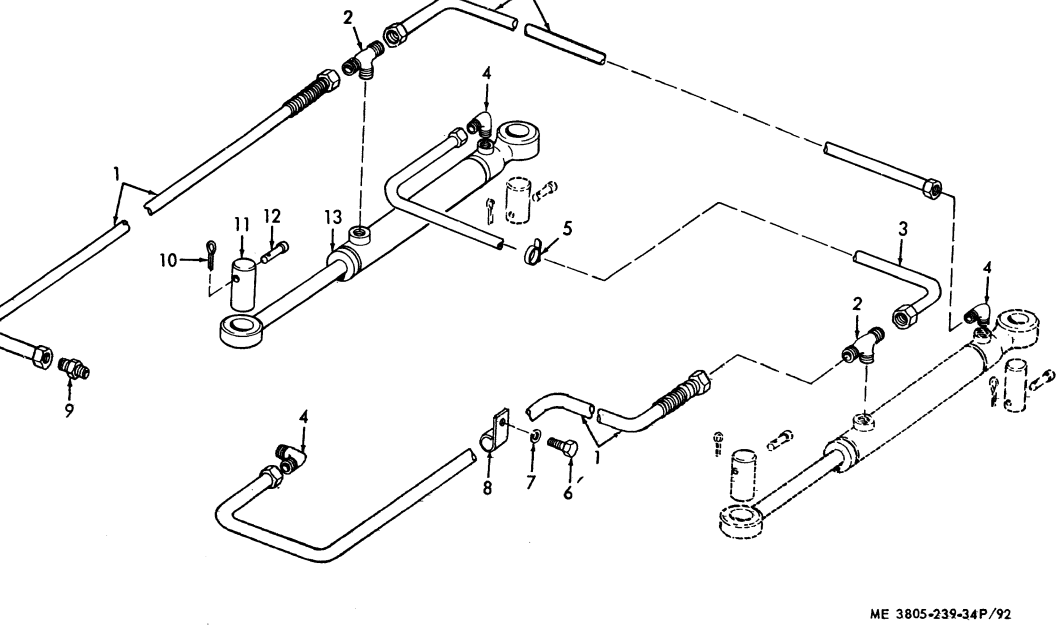

Figure 92. Steering Cylinder and Lines

Figure 95. Rear Drive Shaft

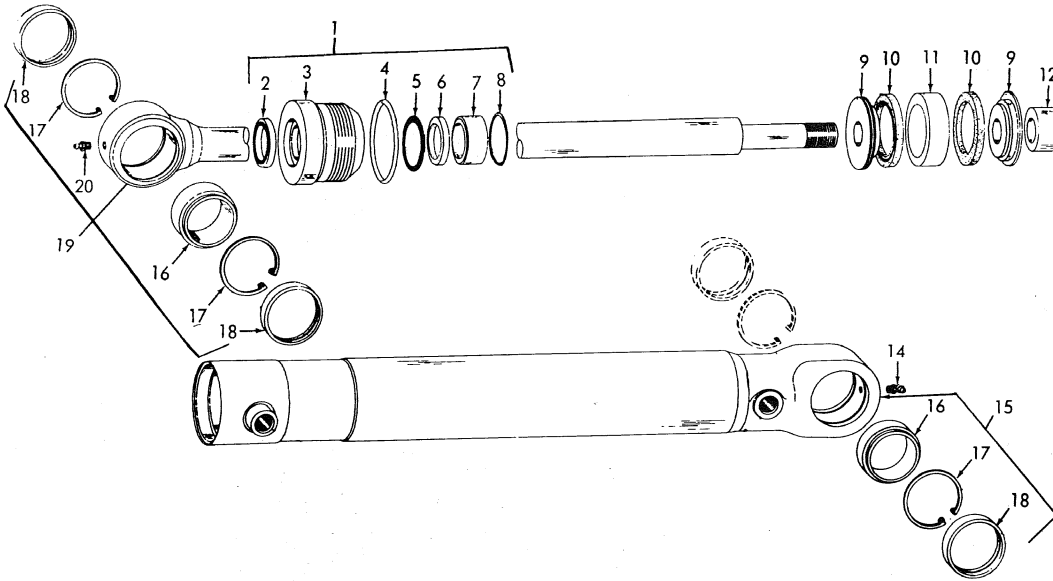

ME 3805-239-34P/

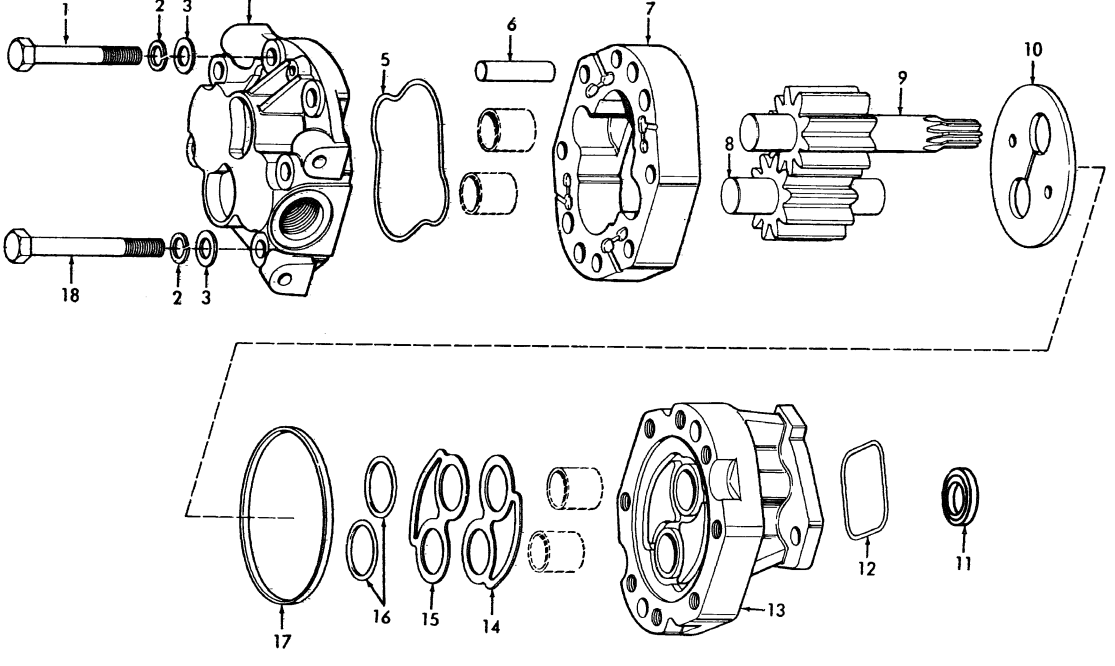

Figure 94. Steering Pump

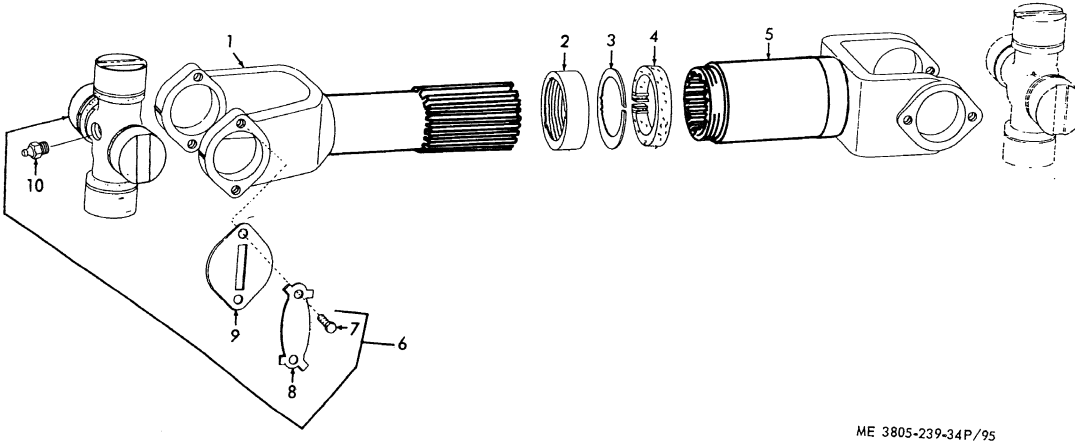

ME 3805-239-34P/95

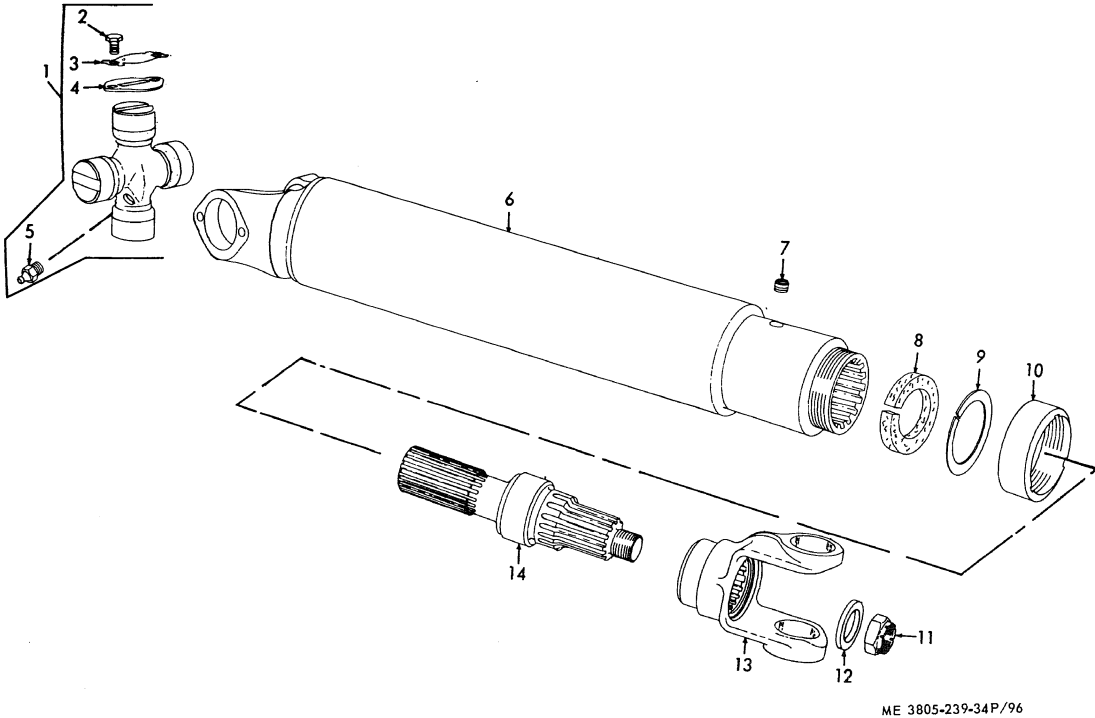

Figure 96. Front Drive Shaft

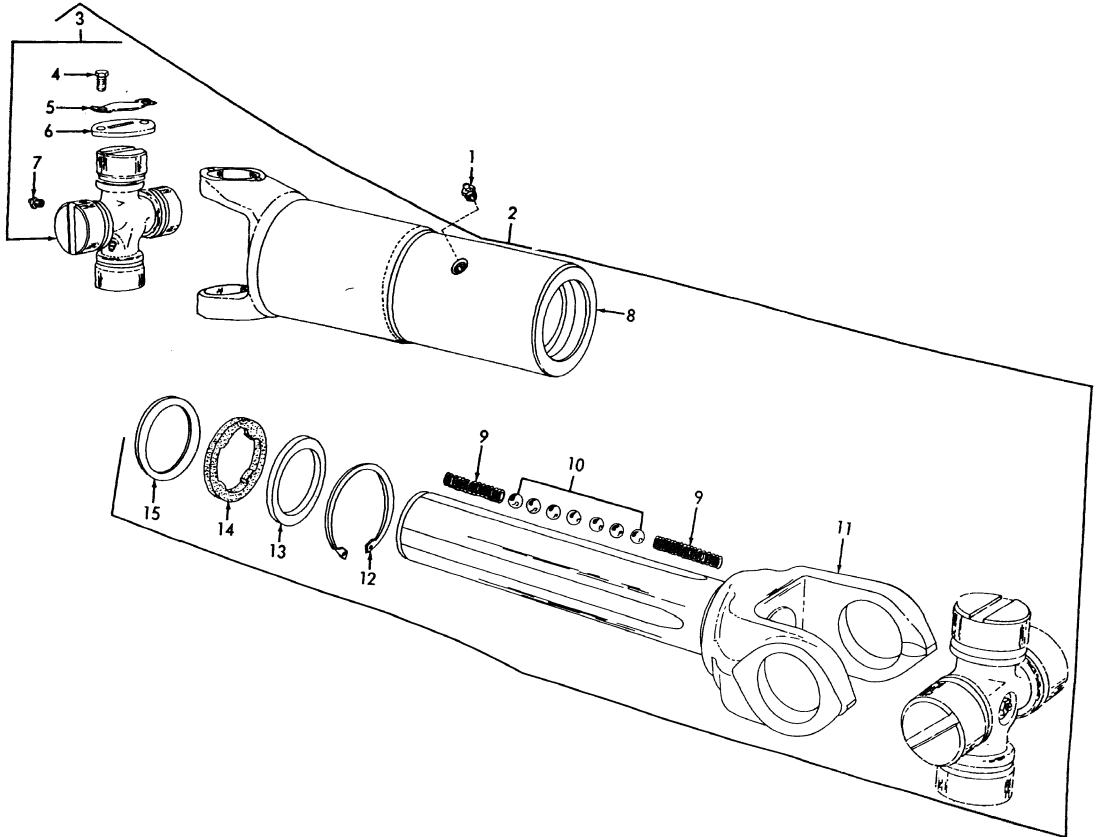
3
4
5
6
7
1
2
8
9
10
9
11
15
14
13
12

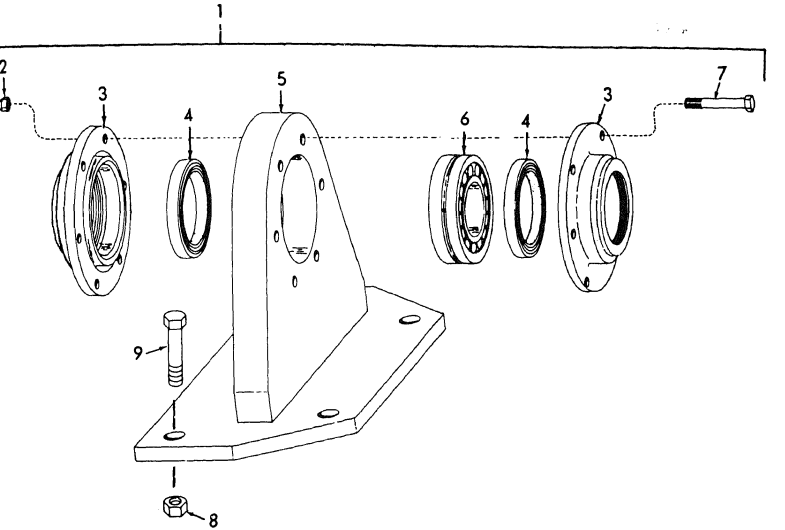

ME 3805-239-34P/98

Figure 98. Center Bearing and Support

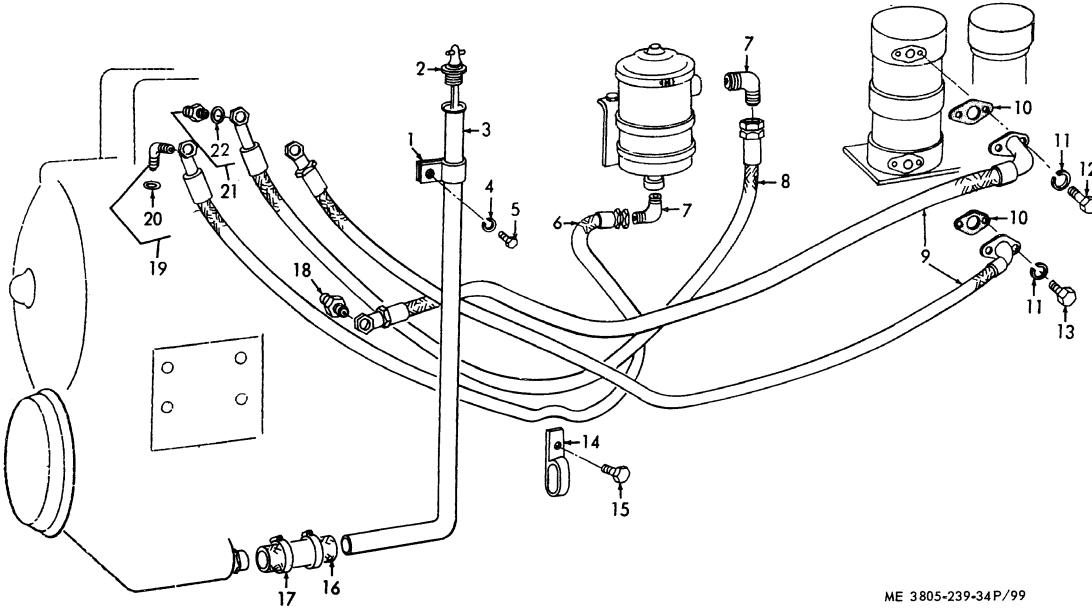

ME 3805-239-34P/99

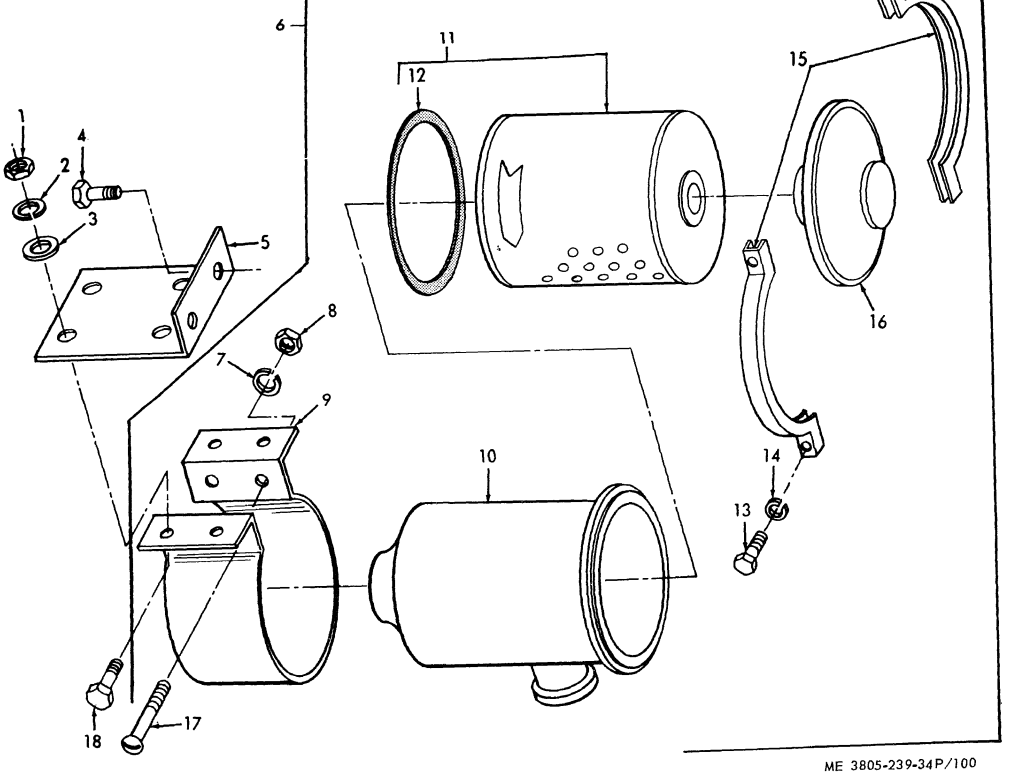

Figure 100. Transmission Oil Filter

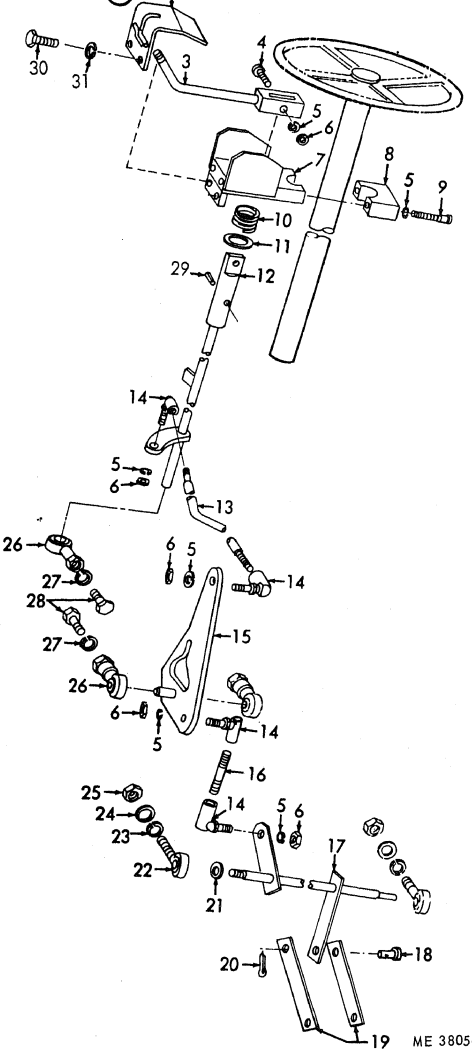

ME 3805-239-34P/101

Figure 101. Transmission Controls

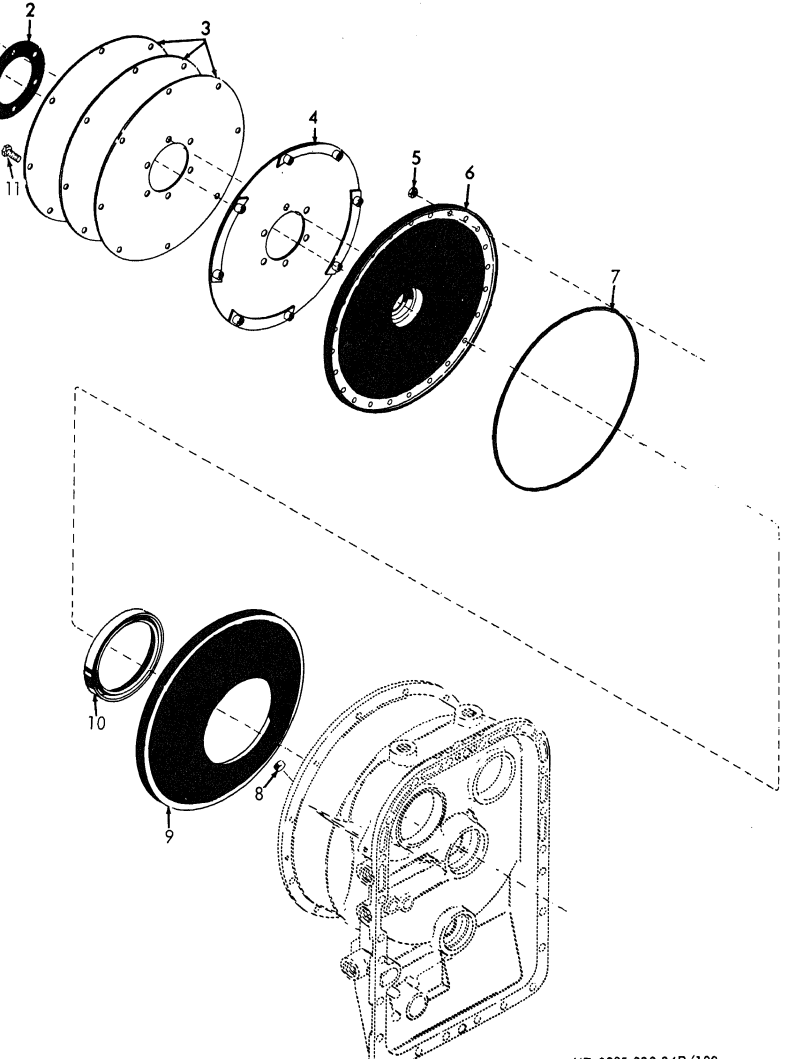

ME 3805-239-34P/102

Figure 102. Torque Converter Disc

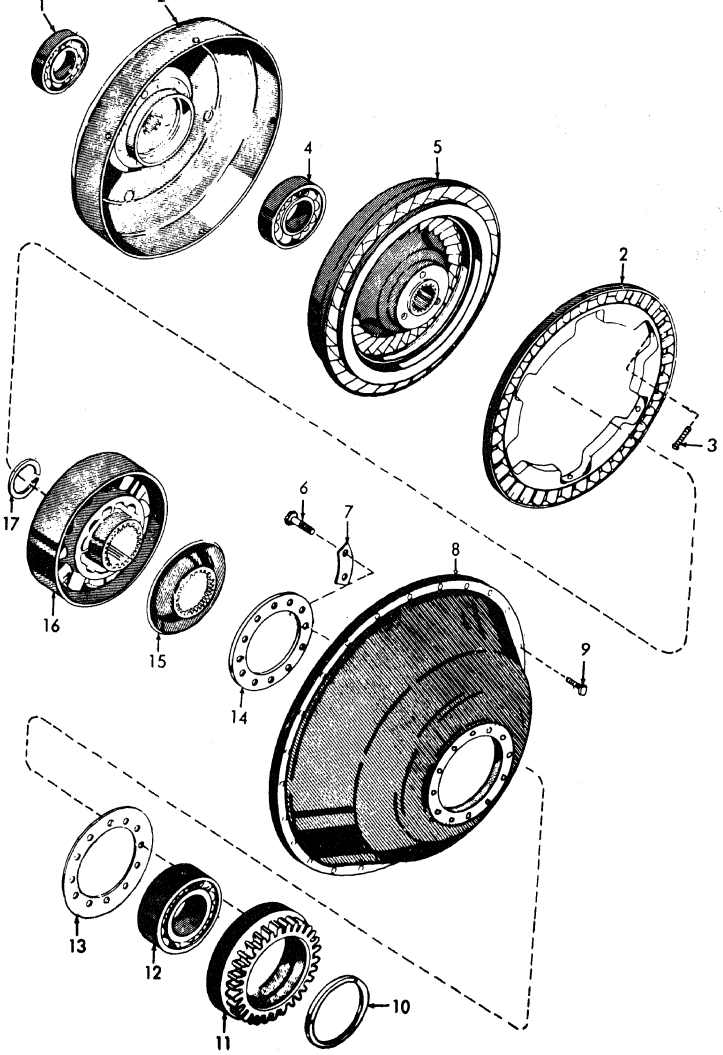

ME 3805-239-34P/103

Figure 103. Torque Converter Turbines

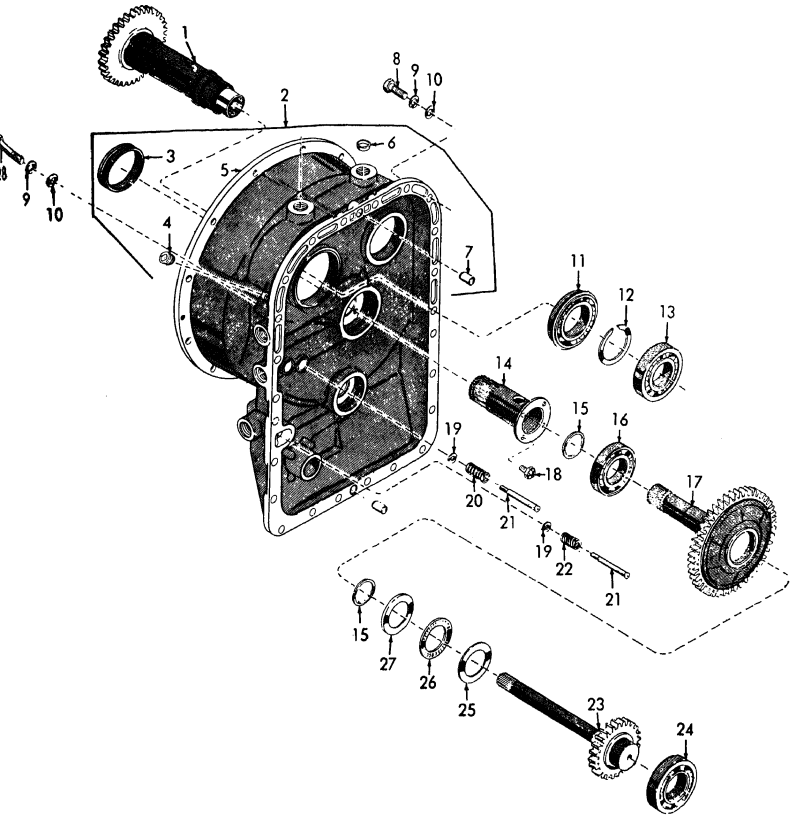

Figure 104. Torque Converter Housing and Drive Gears

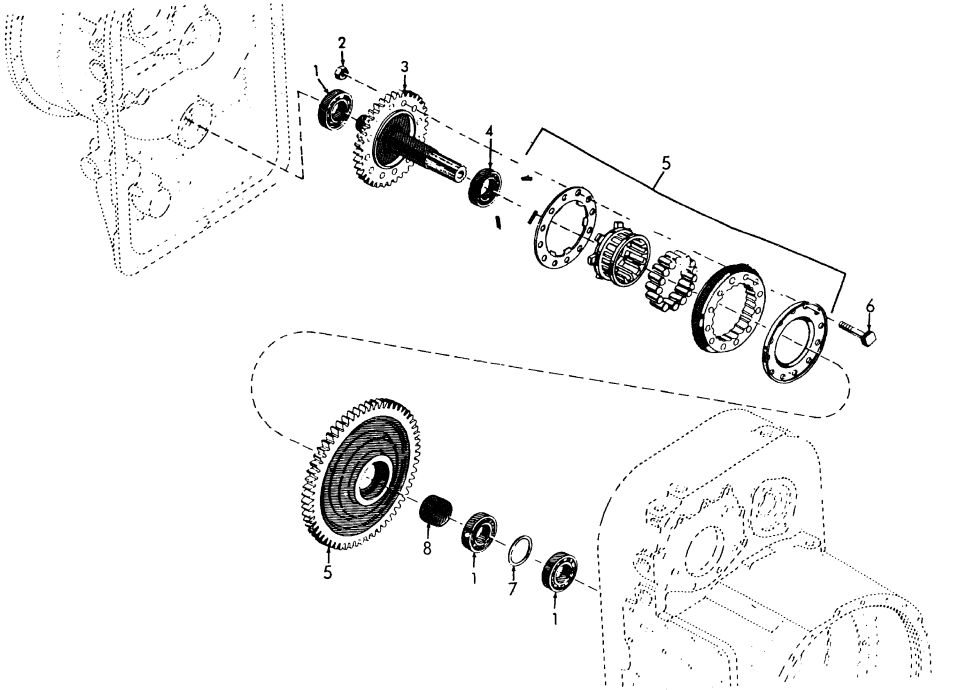

Figure 105. Drive Gears and Flywheel Unit

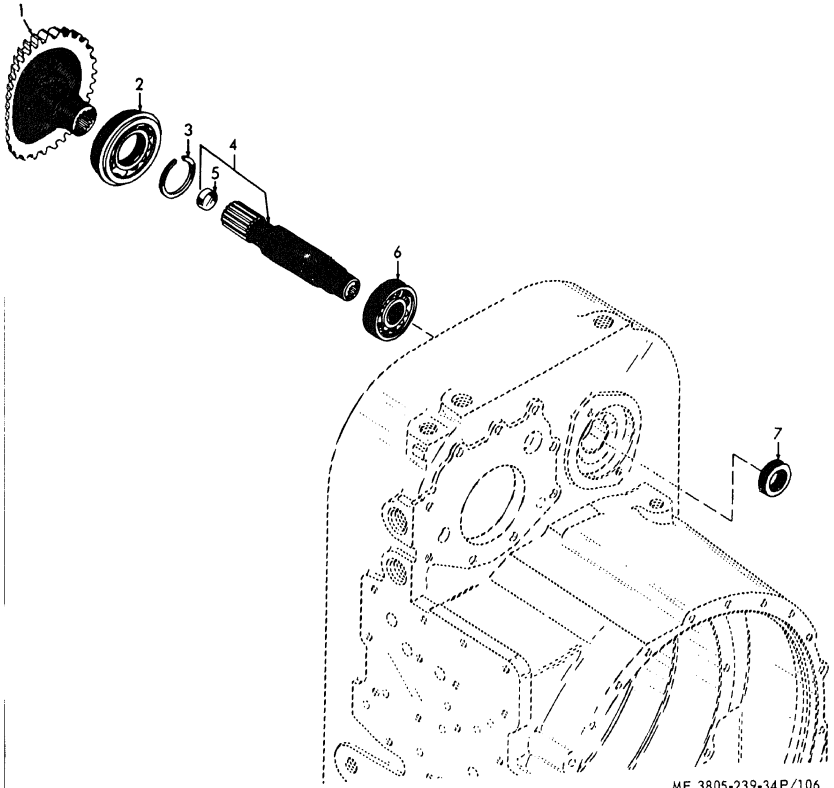

Figure 106. Accessory Drive Gear

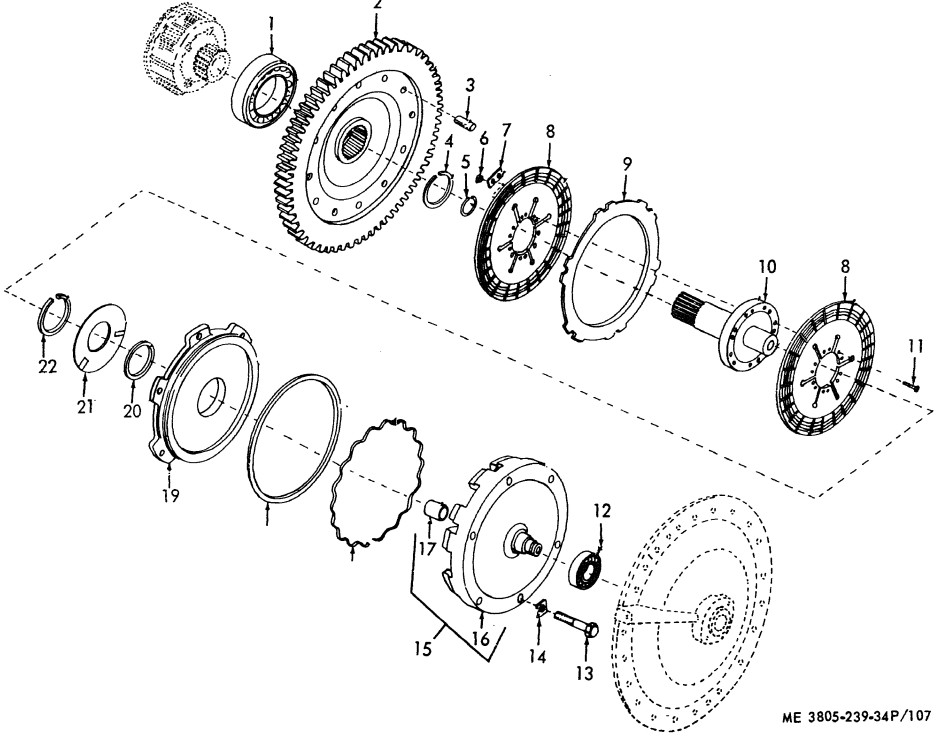

Figure 107. Direct Drive Clutch and Transfer Drive Gear

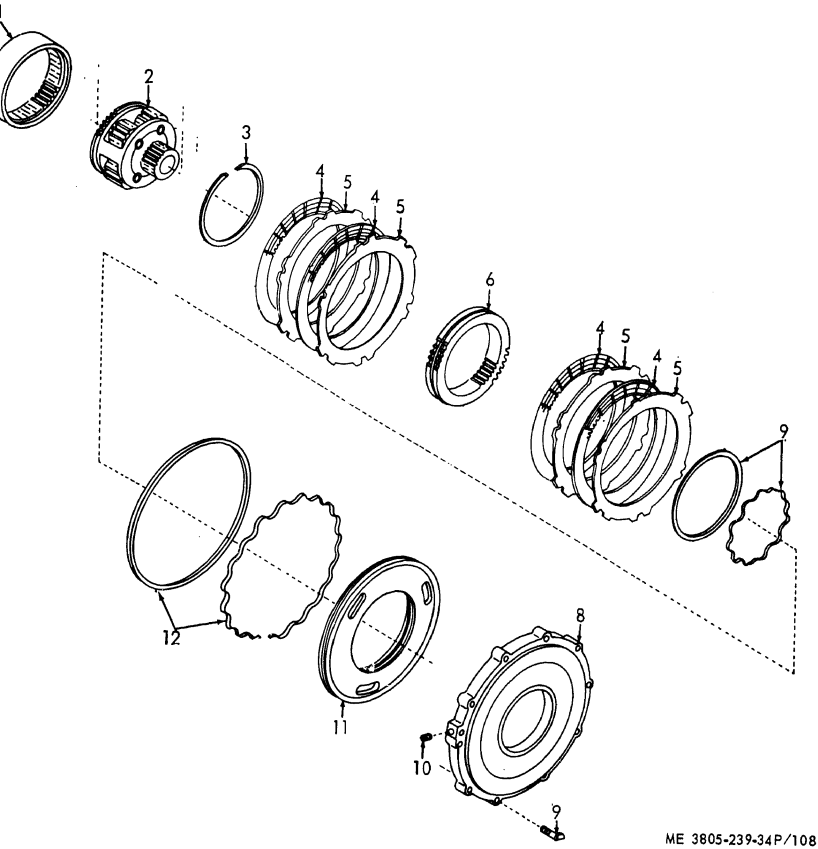

ME 3805-239-34P/108

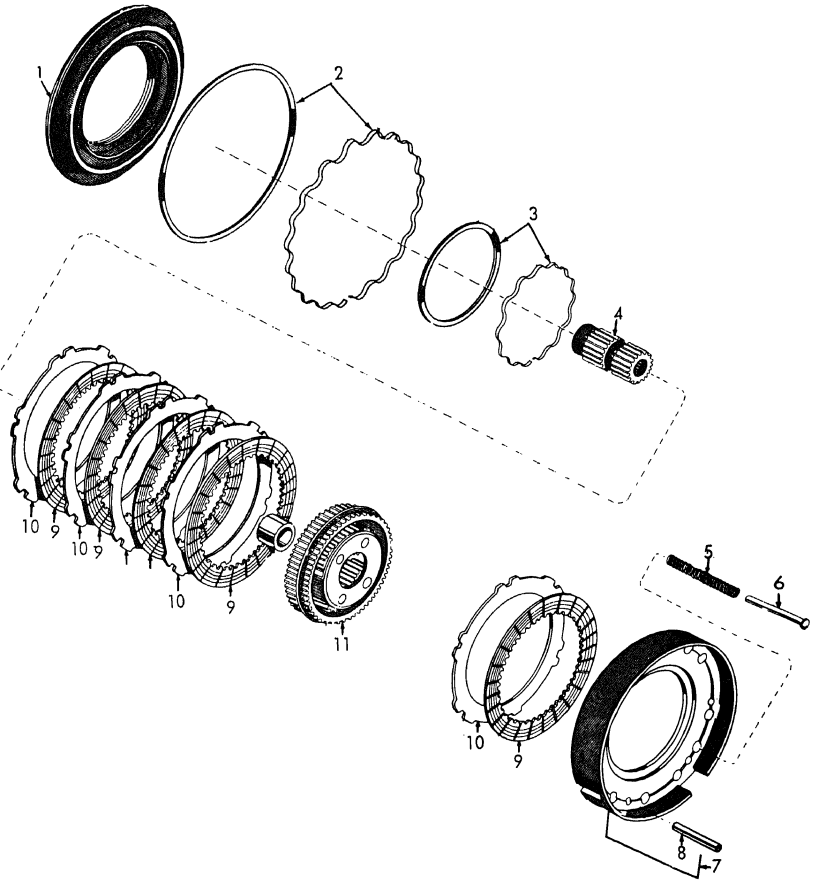

Figure 109. Reverse Clutch and Planetary

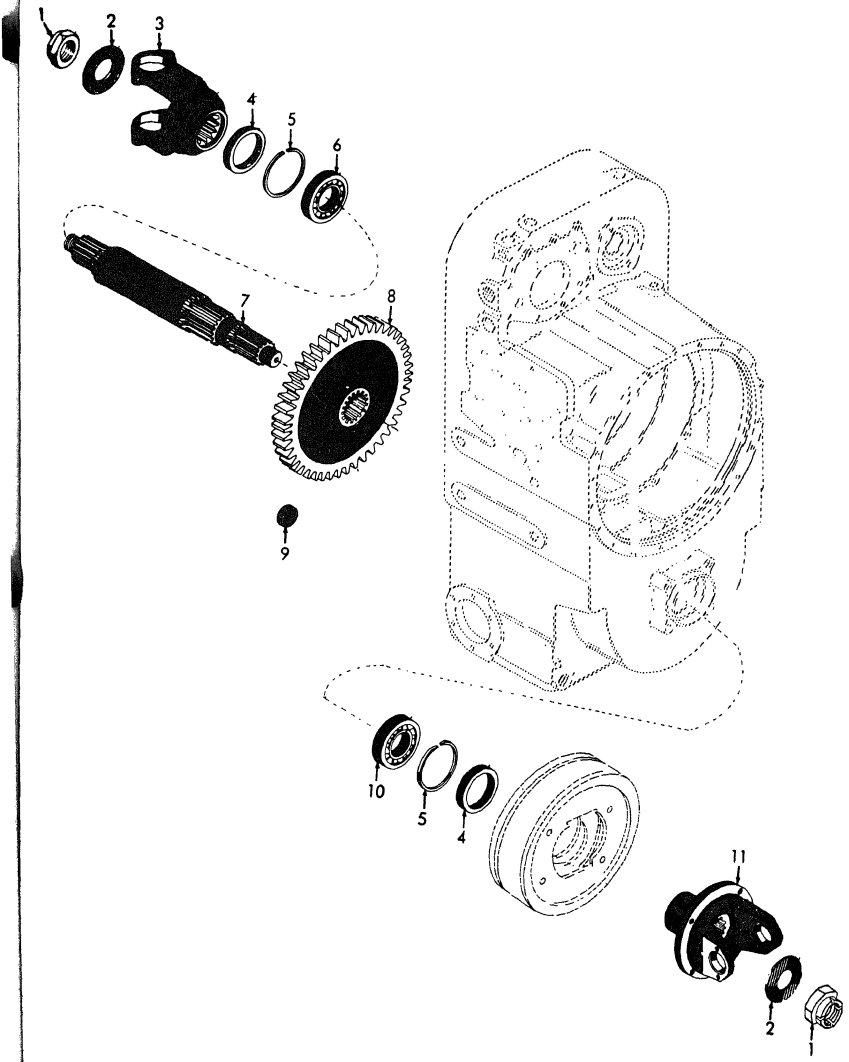
1
2
3
4
5
6
7
8
9
10
5
4
11
2
1

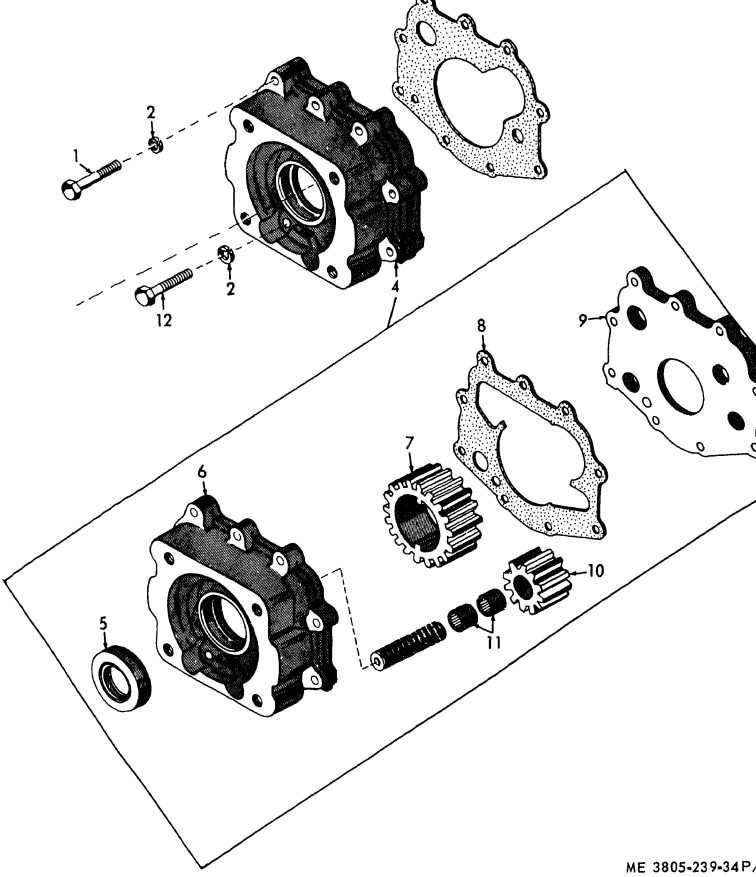

Figure 111. Charging Pump

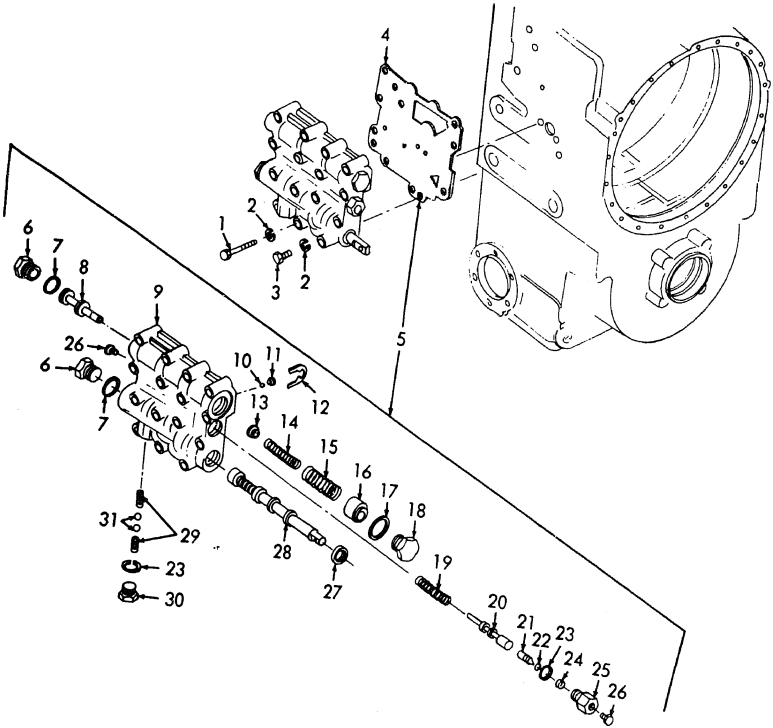

ME 3805-239-34P/112

Figure 112. Selector Valve

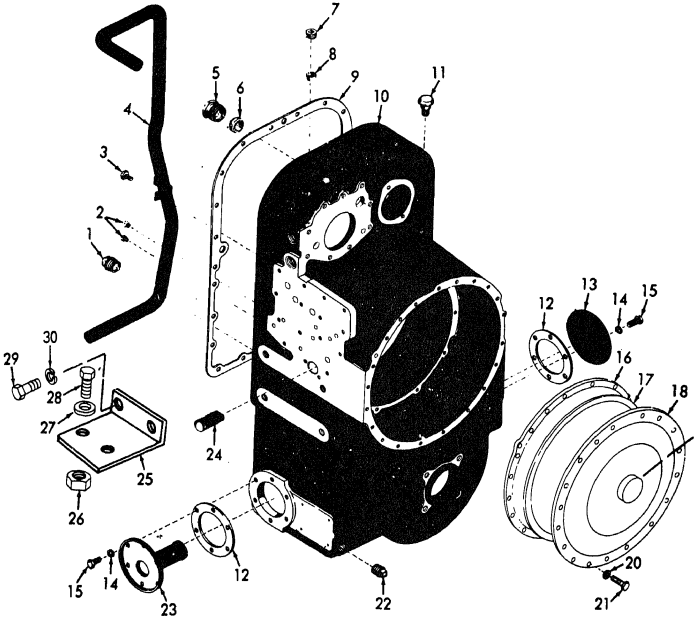

Figure 113. Transmission Housing and Covers

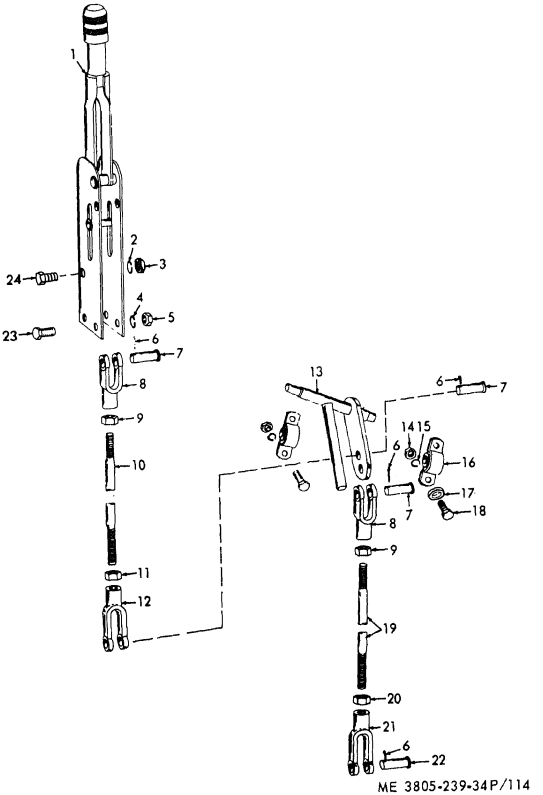

Figure 114. Parking Brake Control

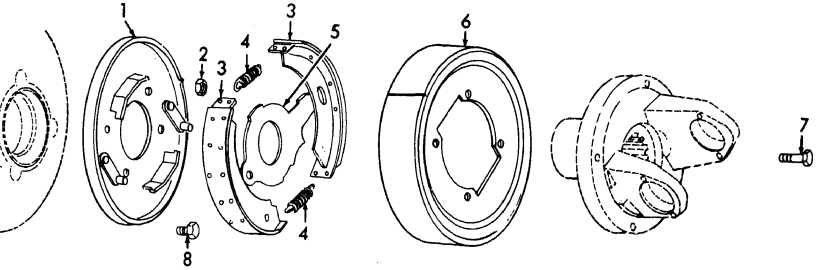

Figure 115. Parking Brake

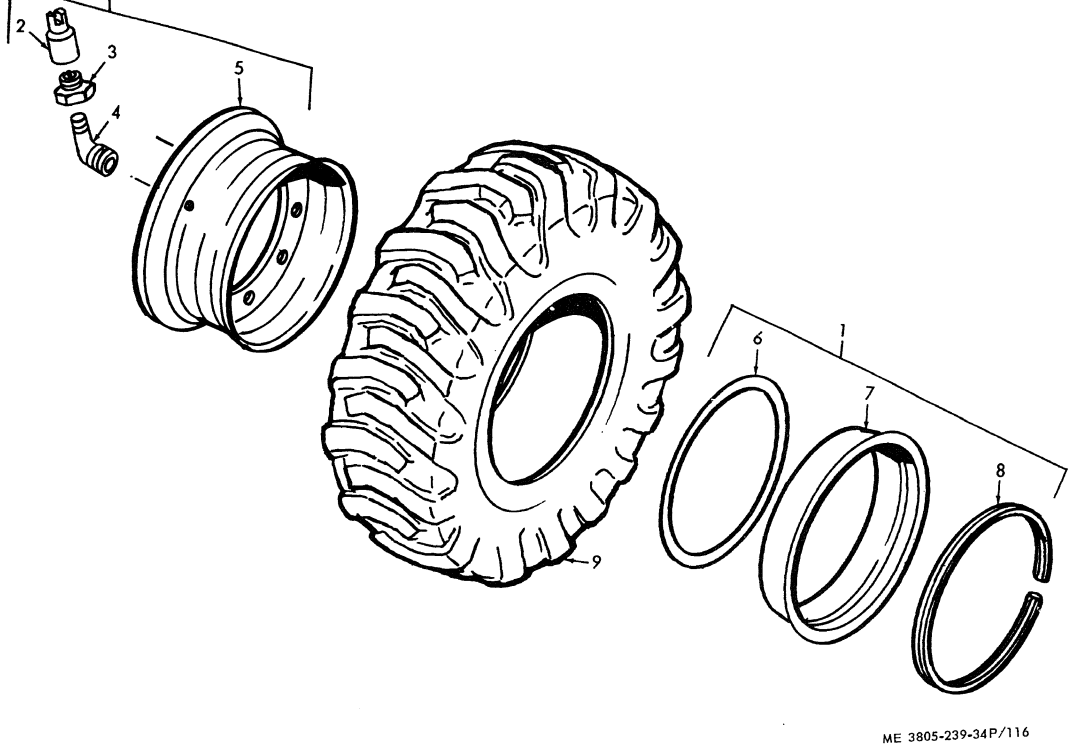

Figure 116. Wheel and Tire

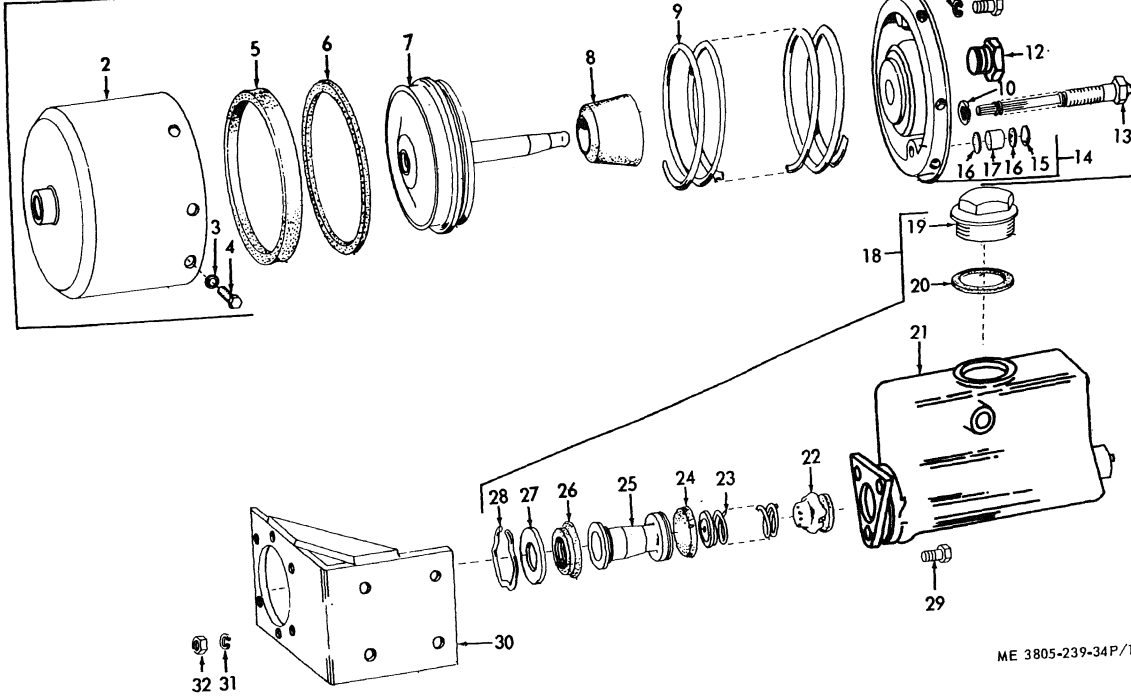

Figure 118. Front Power Cluster

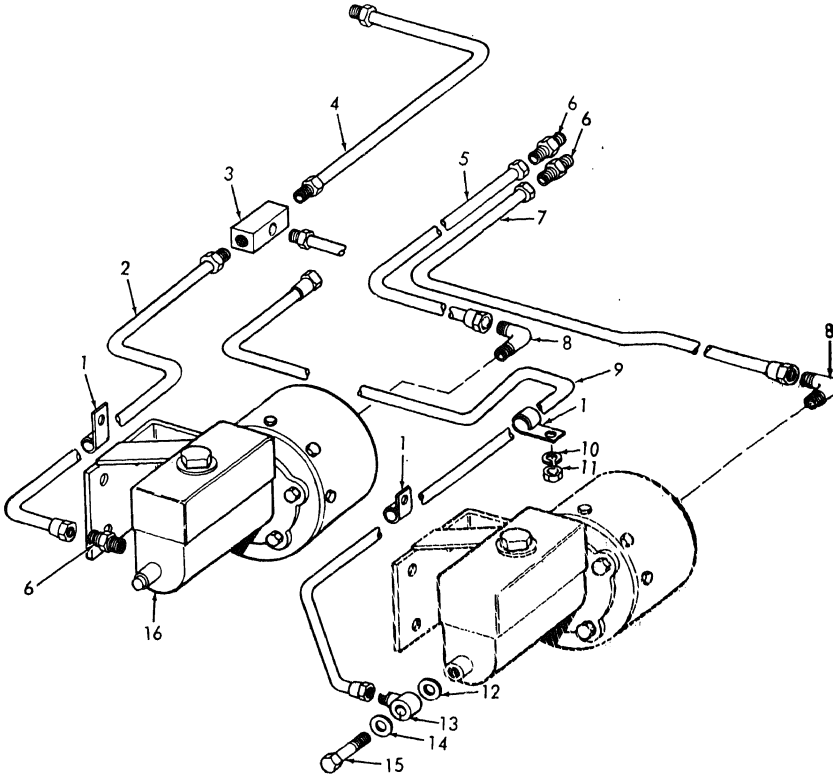

ME 3805-239-34P/117

Figure 117. Front and Rear Power Cluster and Lines

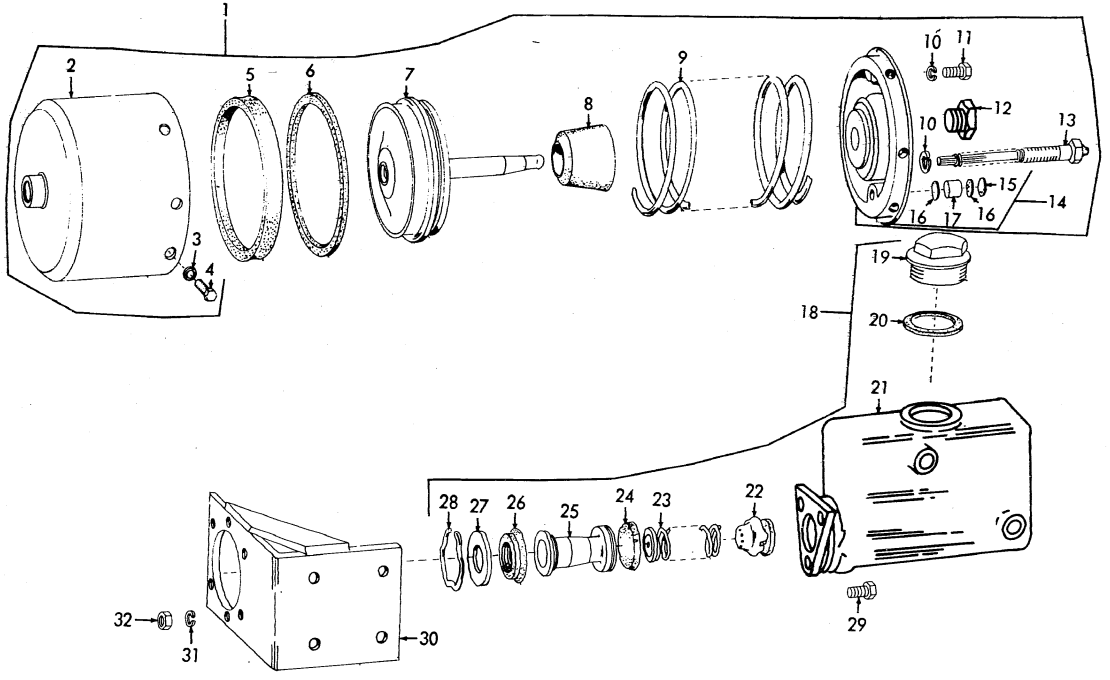

ME 3805-239-34P/119

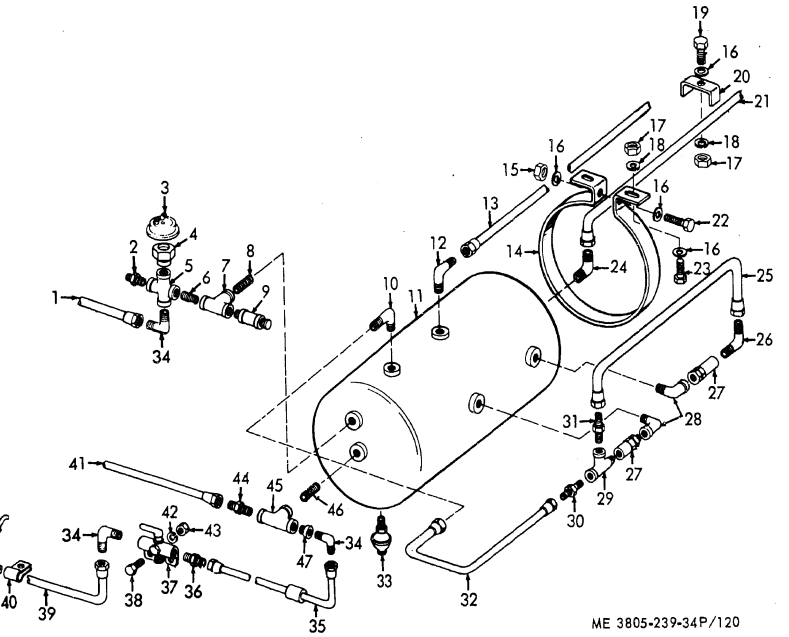
19
16
20
21
17
18
18
17
16
15
16
22
13
3
4
2
5
6
7
8
9
1
34
12
14
24
16
23
25
10
11
26
27
28
31
27
29
30
41
44
45
46
42
43
34
47
34
33
32
40
39
38
37
36
35
ME 3805-239-34P/120

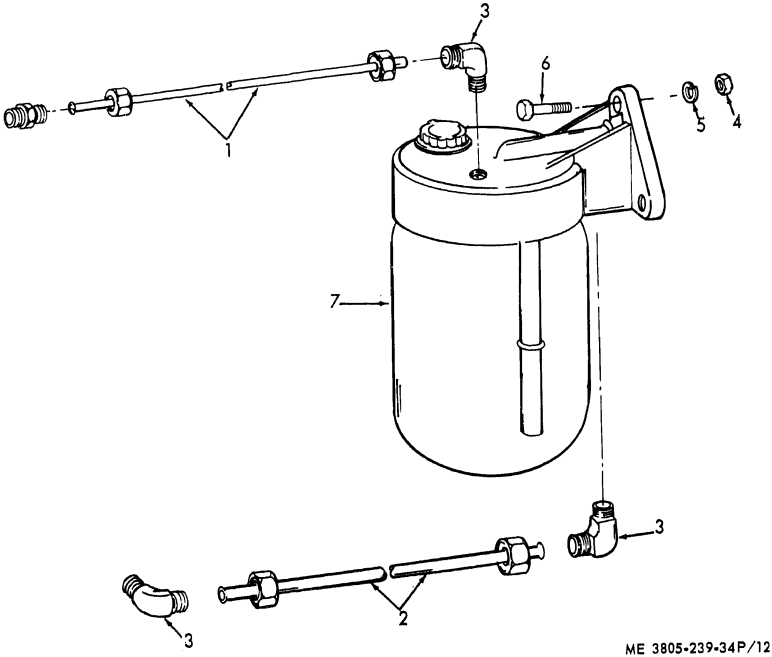

Figure 121. Alcohol Injector and Lines

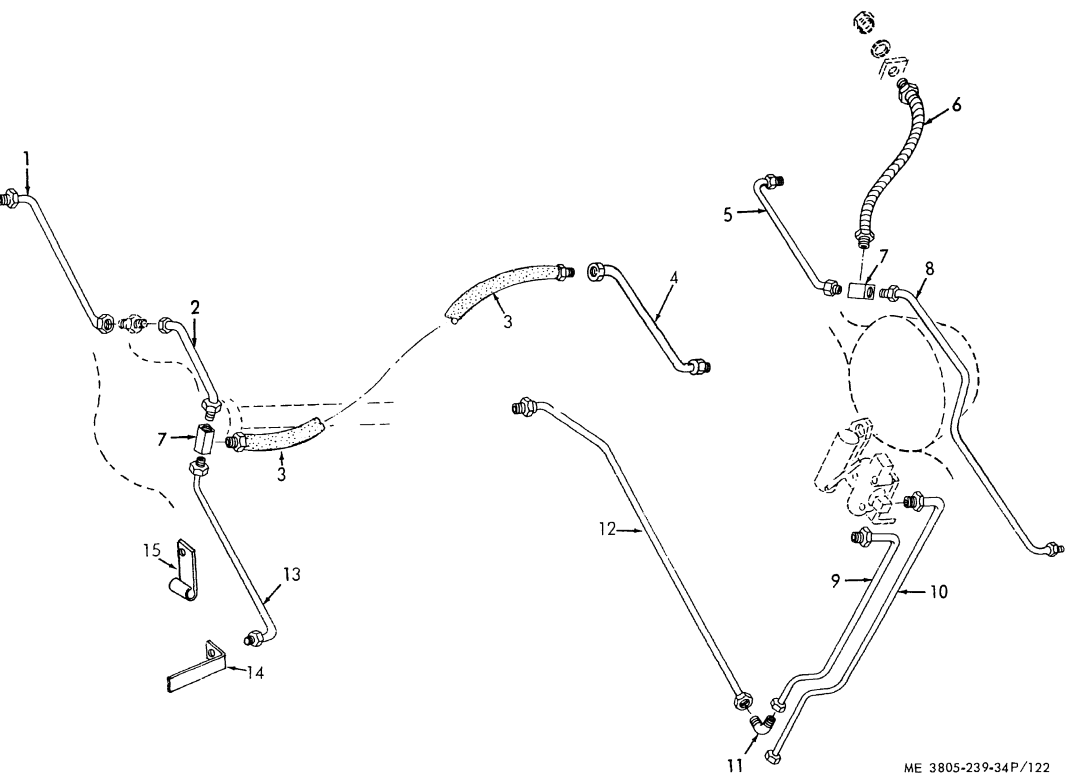

Figure 122. Wheel Brake Lines and Clutch Cut-Off Valve

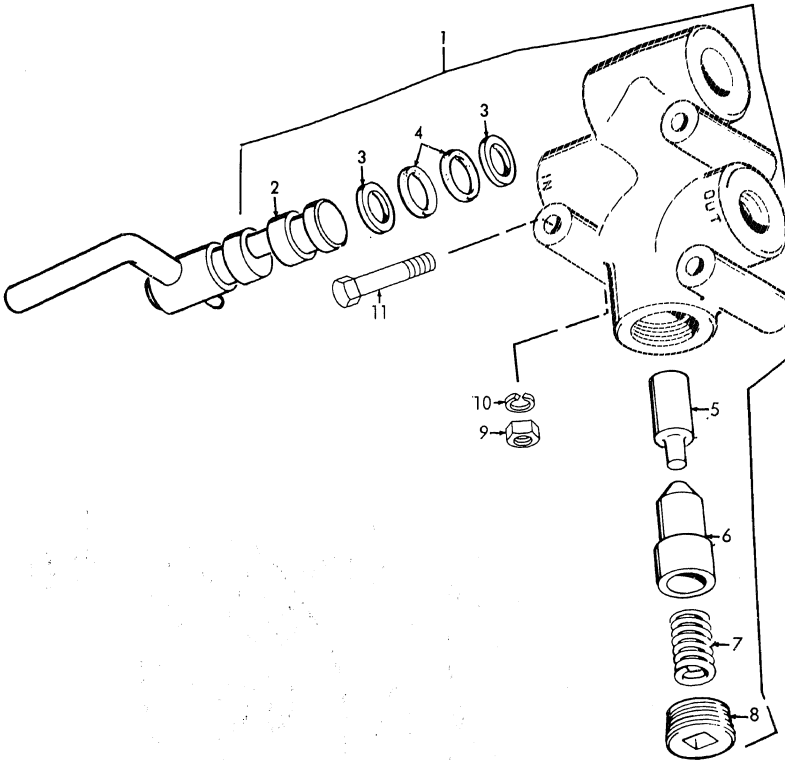

Figure 123. Clutch Cut-Off Valve

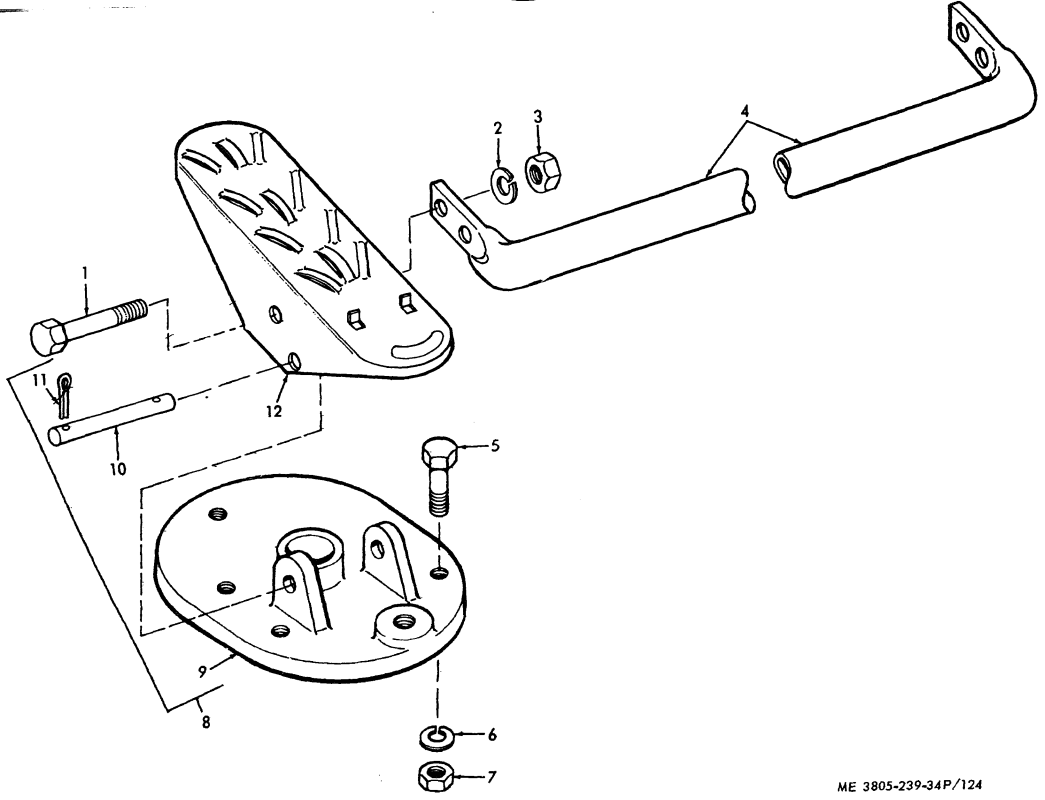

Figure 124. Treadle Valve Connecting Pedal

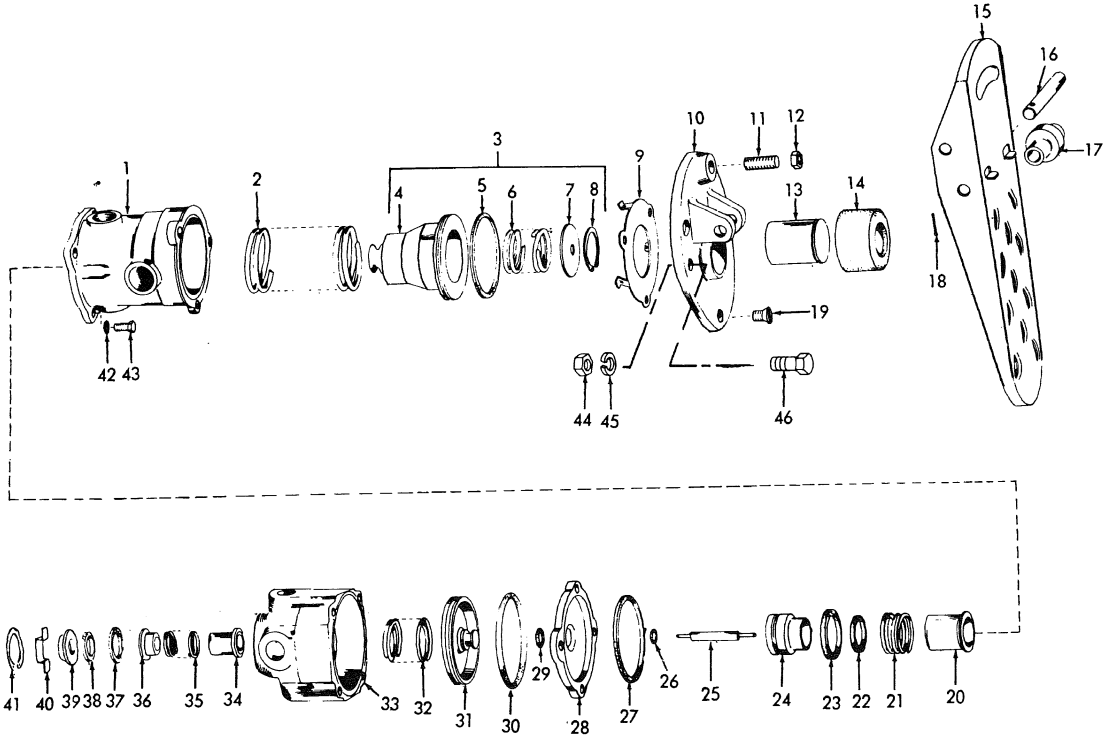

ME 3805-239-34P/125

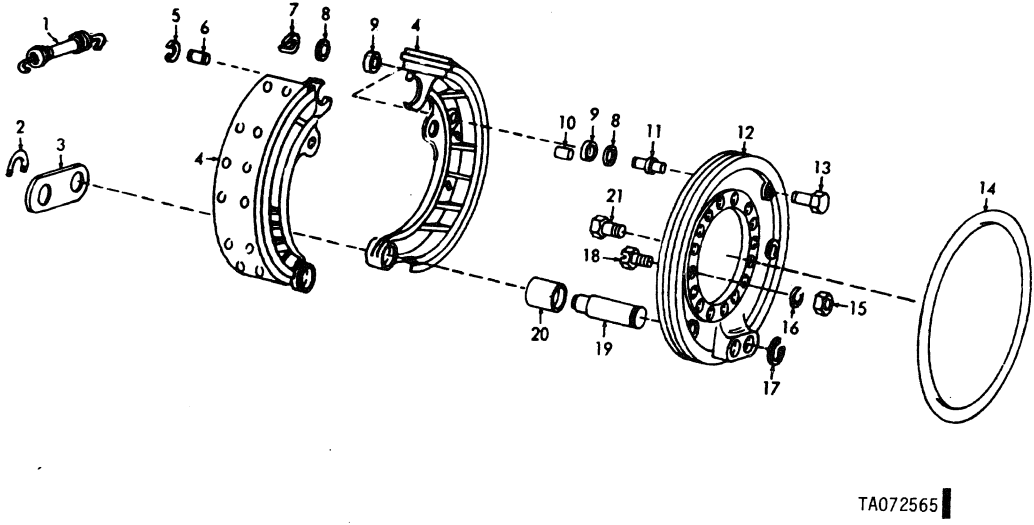

Figure 126. Front Service Brakes.

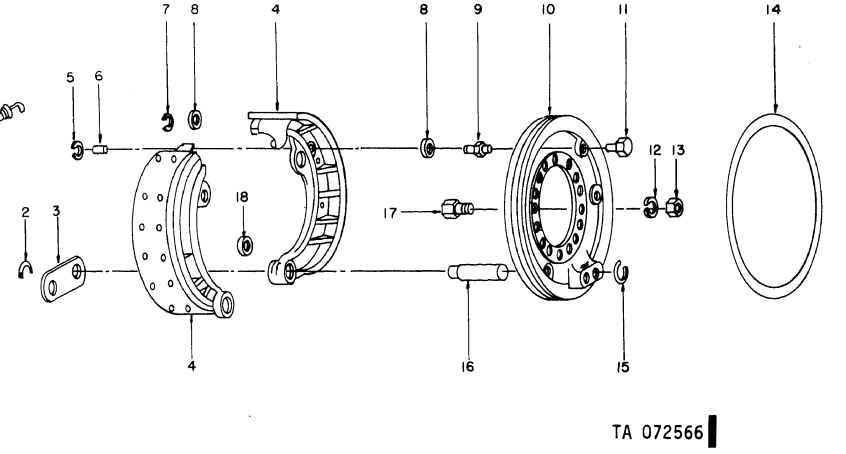

Figure 127. Rear service brakes.

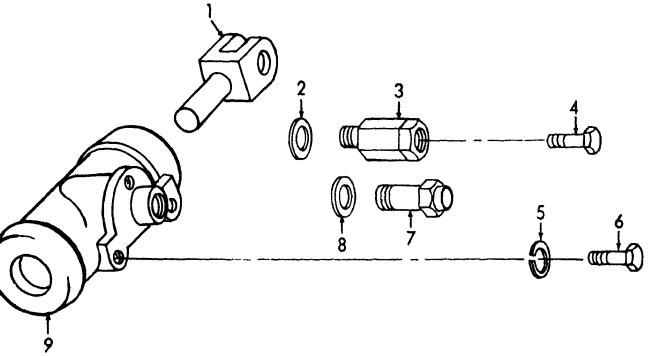

ME 3805-239-34P/128

Figure 128. Wheel Cylinder Mounting

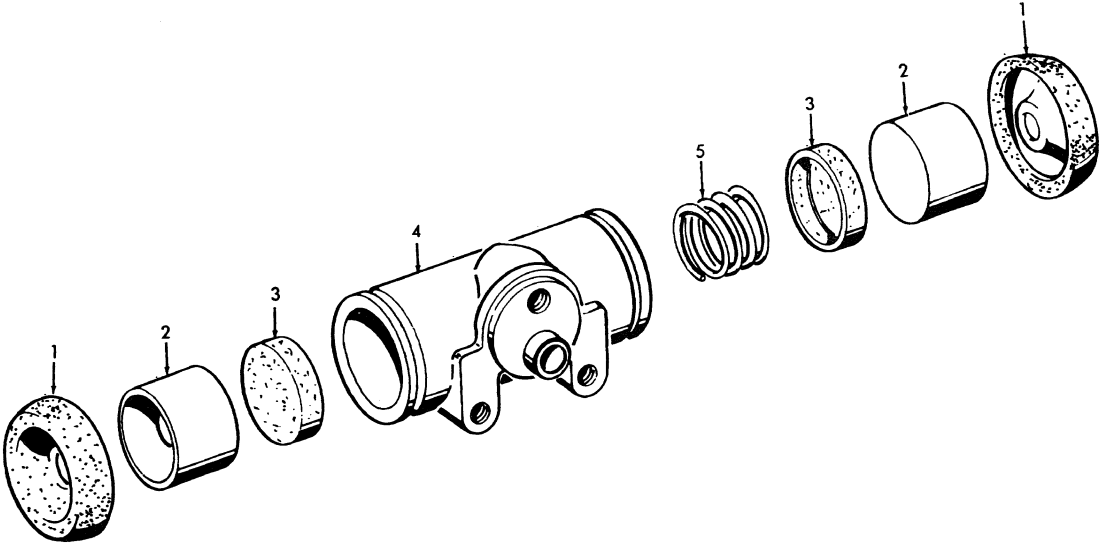

ME 3805-239-34P/129

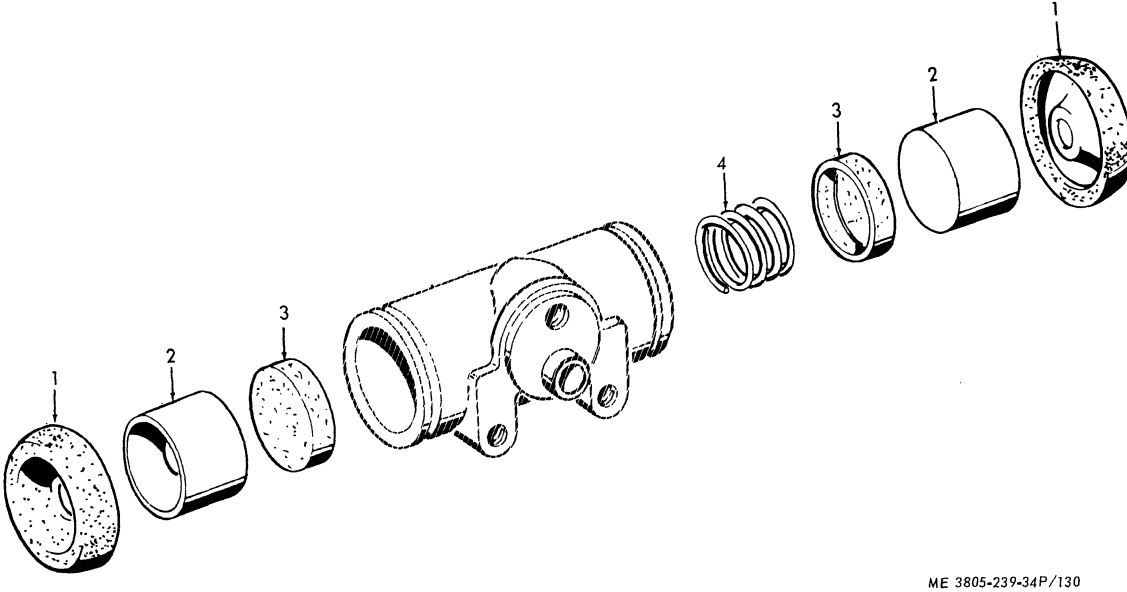

Figure 130. Front Wheel Cylinder

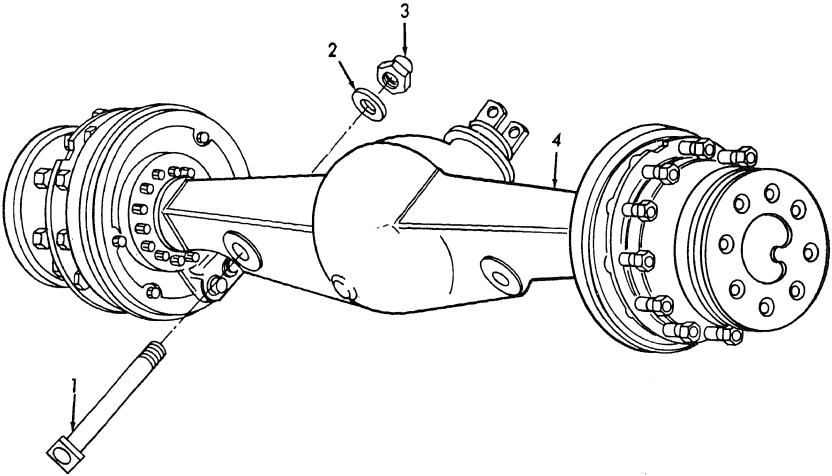

ME 3805-239-34P/131

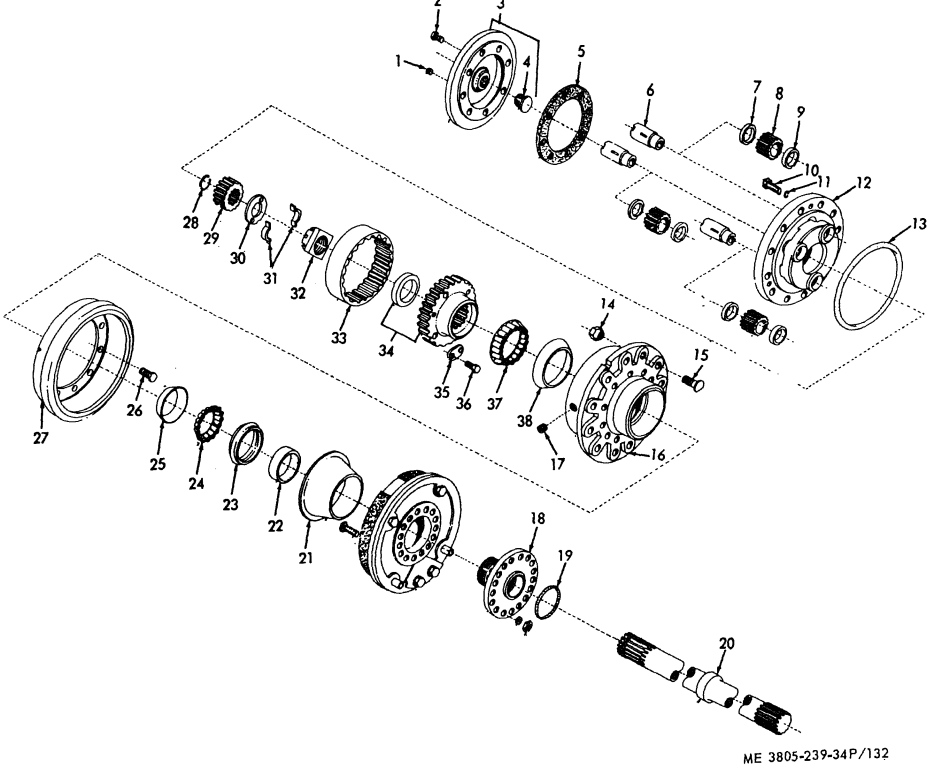

Figure 132. Front Planetary Drive Unit

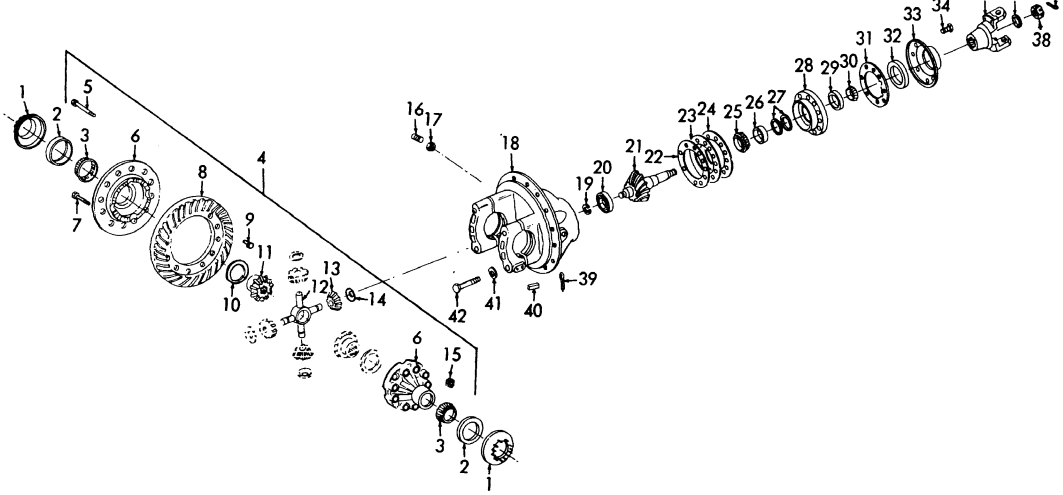

Figure 133. Front Differential

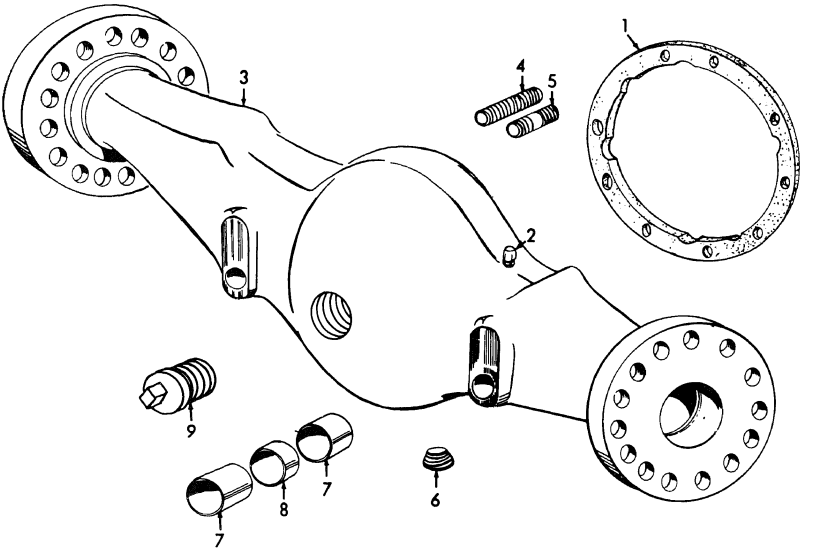

ME 3805-239-34P/134

Figure 134. Front Axle Housing

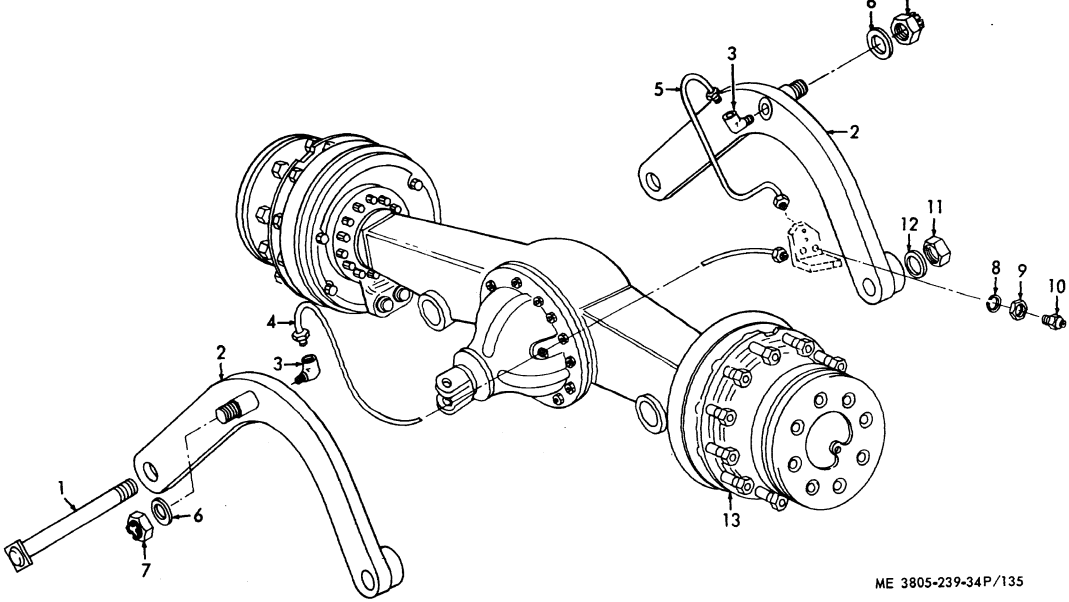

Figure 135. Rear Axle

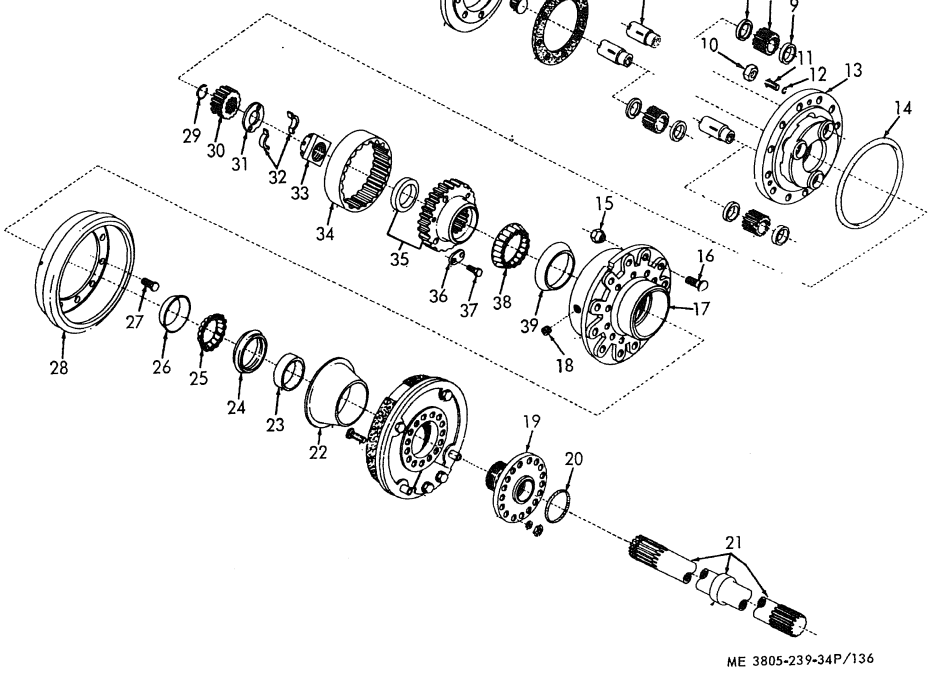

Figure 136. Rear Planetary Drive Unit

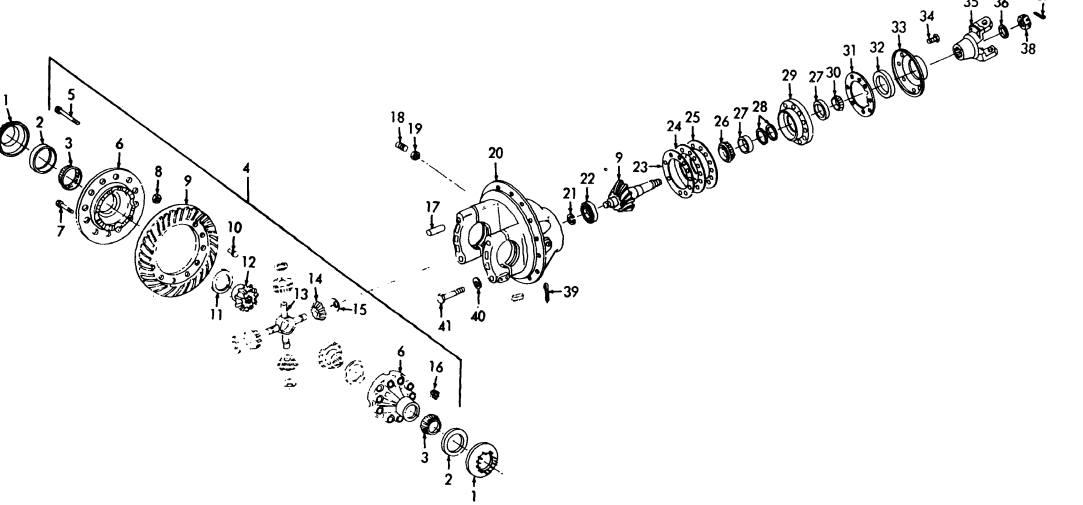

Figure 137. Rear Differential

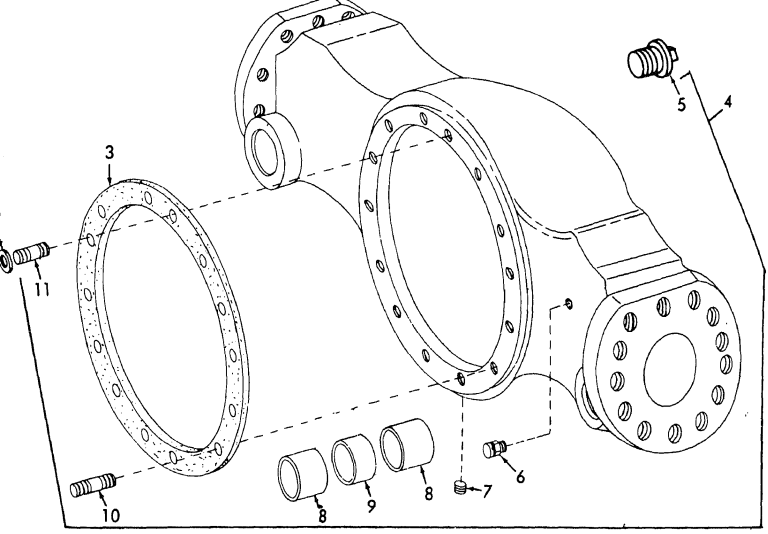

ME 3805-239-34P/138

Figure 138. Rear Axle Housing

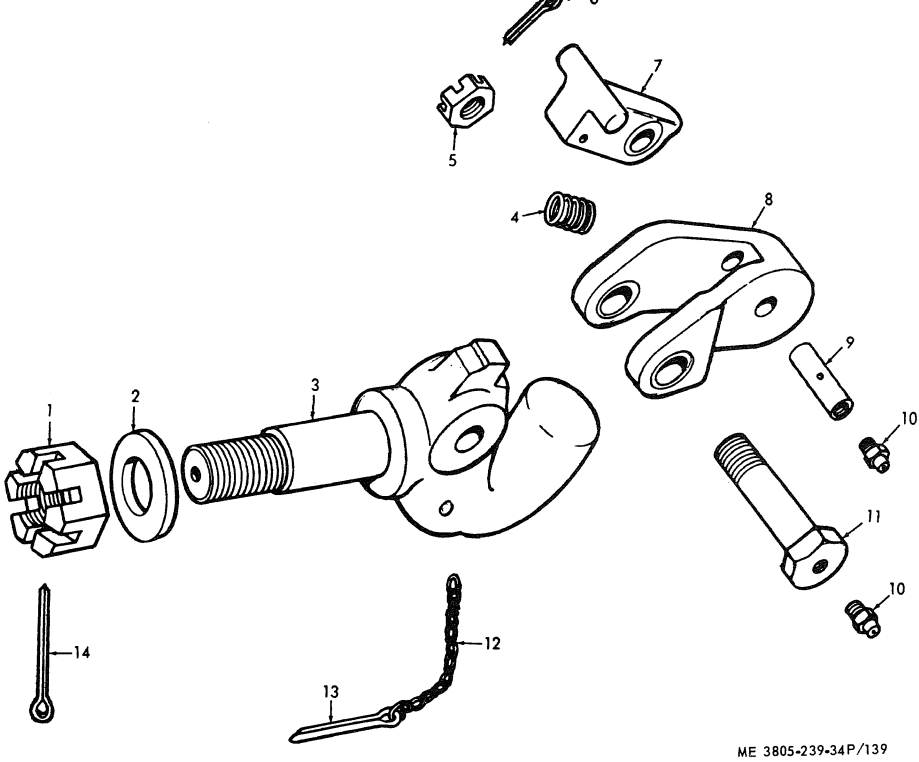

Figure 139. Pintle Hook

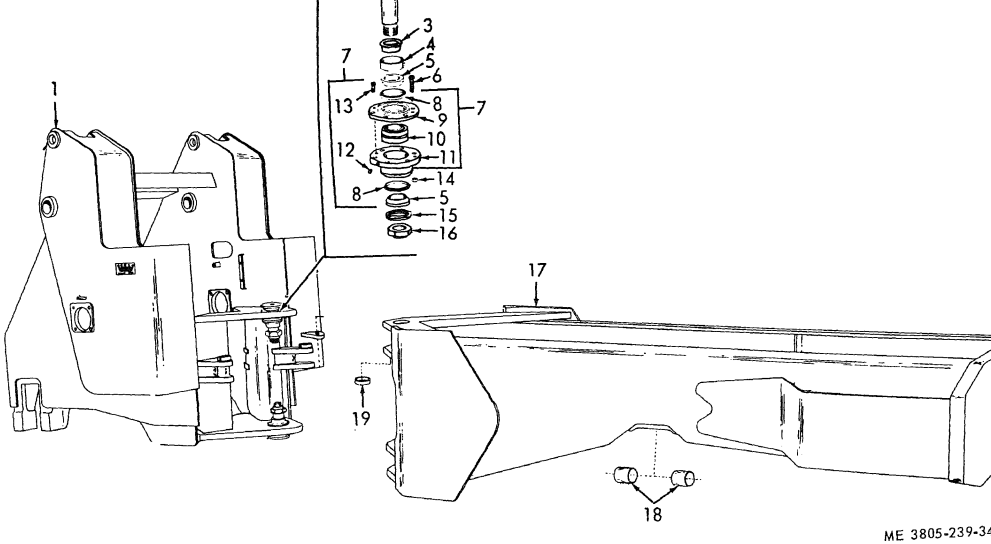

Figure 140. Main Frame

STOCK NUMBER	FIGURE NO.	ITEM NO.
2010-00-963-6897	132	12
2010-00-966-4462	132	35
2010-00-966-4463	132	4
	136	4
2510-00-111-5195	131	1
2510-00-111-5198	140	4
2510-00-111-9199	140	5
2510-00-133-9946	140	7
2510-00-423-0272	30	16
2510-00-423-0343	30	34
2510-00-427-5689	30	16
2520-00-012-2058	133	
2510-00-018-3805	133	1
2520-00-022-3924	107	18
2520-00-025-9164	111	4
2520-00-027-1004	131	4
2520-00-028-5585	104	
2520-00-026-9964	96	4
	97	6
2520-00-058-2870	126	12
2520-00-080-6756	104	21
2520-00-080-6919	113	4
2520-00-080-6923	113	24
2520-00-080-6924	113	23
2520-00-080-6993	102	3
2520-00-105-9823	112	13
2520-00-110-9602	134	2
	138	6
2520-00-110-9603	132	20
2520-00-110-9604	133	21
2520-00-112-7210	137	9
2520-00-133-9947	132	18
2520-00-133-9949	112	12
2520-00-133-9950	96	14
2520-00-133-9951	102	4
2520-00-133-9952	112	20
2520-00-133-9953	133	4
2520-00-133-9954	133	18
2520-00-133-9956	112	16
2520-00-133-9957	110	11
2520-00-133-9958	96	
2520-00-133-9959	113	11
2520-00-133-9960	43	21
2520-00-133-9961	110	3
2520-00-133-9962	95	5
2520-00-133-9963	95	1
2520-00-133-9964	133	35
2520-00-133-9965	112	11
2520-00-133-9966	96	13
2520-00-133-9967	11	1
2520-00-133-9995	137	20
2520-00-133-9996	112	5
2520-00-133-9997	112	28
2520-00-287-0358	136	9
2520-00-303-5074	133	12
2520-00-352-2168	96	1
	97	3
2520-00-393-6194	137	13
2520-00-401-9270	105	5
2520-00-425-3310	96	10
2520-00-475-6554	133	40
2520-00-475-6558	133	22
2520-00-477-1755	136	3
2520-00-488-8187	95	
2520-00-496-1228	96	3
	97	5
2520-00-563-2884	133	33
2520-00-572-4212	137	31
2520-00-594-5077	133	23
2520-00-594-5078	133	24
2520-00-630-3058	136	6
2520-00-679-6936	107	21
2520-00-690-9041	136	19
2520-00-718-7358	107	9
	108	5
	109	10
2520-00-718-7361	108	4

STOCK NUMBER	FIGURE NO.	ITEM NO.
	109	9
2520-00-738-9318	137	4
2520-00-757-0179	109	1
2520-00-798-4687	133	14
2520-00-798-4688	132	29
2520-00-798-7539	133	13
2520-00-876-8805	110	4
2520-00-876-8884	109	6
2520-00-894-7537	108	11
2520-00-895-3230	97	2
2520-00-913-0727	133	8
2520-00-932-0859	104	15
2520-00-932-0862	113	6
2520-00-933-0823	110	9
2520-00-999-9037	108	7
	109	2
2530-00-012-2046	92	13
2530-00-012-2048	137	
2530-00-018-2201	135	13
2530-00-080-6770	115	3
2530-00-080-6779	115	2
2530-00-110-9605	126	4
2530-00-110-9606	127	4
2530-00-110-9608	94	
2530-00-110-9609	93	
2530-00-111-2517	126	
2530-00-111-5130	136	28
2530-00-111-6473	116	6
2530-00-112-0073	136	21
2530-00-115-0233	120	11
2530-00-115-0235	120	3
2530-00-115-0237	125	17
2530-00-115-0238	125	13
2530-00-115-0240	125	3
2530-00-115-0241	90	
2530-00-115-0242	90	25
2530-00-115-0243	91	8
2530-00-115-0244	93	1
2530-00-115-0245	93	9
2530-00-115-0246	93	19
2530-00-115-0256	93	7
	93	8
2530-00-133-9968	118	15
	119	15
2530-00-133-9970	117	16
2530-00-133-9971	121	7
2530-00-133-9972	91	1
2530-00-133-9975	127	10
2520-00-133-9976	132	16
2530-00-133-9993	136	17
2530-00-133-9999	115	
2530-00-169-4962	124	8
2530-00-194-4369	126	11
2530-00-225-0708	88	10
2530-00-233-7799	124	4
2530-00-288-6169	128	9
	129	4
2530-00-353-3038	130	
2530-00-371-4144	126	2
	127	2
2530-00-375-0998	90	11
2530-00-378-7701	126	5
2530-00-402-8240	94	10
2530-00-412-1785	116	1
2530-00-419-8688	89	4
2530-00-457-1676	127	5
2530-00-466-8624	117	12
2530-00-507-6394	118	
2530-00-507-6401	130	
2530-00-509-9786	85	9
2530-00-523-1797	90	28
2530-00-529-2883	130	2
2530-00-558-5588	118	18
2530-00-563-4391	126	7
2530-00-630-0058	118	1
2530-00-656-6822	136	32

SECTION IV. INDEX-NATIONAL STOCK NUMBER AND REFERENCE NUMBER CROSS-REFERENCE TO FIGURE AND ITEM NUMBER

STOCK NUMBER	FIGURE NO.	ITEM NO.
2530-00-691-1233	120	37
2530-00-696-0647	130	3
2530-00-696-2998	138	3
2530-00-701-3565	85	14
2530-00-715-7658	119	18
2530-00-869-7355	85	6
2530-00-917-7590	90	15
2530-00-917-7592	90	37
2530-00-920-6791	115	
2530-00-920-6792	129	
2530-00-934-8191	90	19
2530-00-936-2212	132	27
2530-00-960-9337	89	1
2530-00-970-3444	119	
2530-00-972-8356	114	1
2530-00-976-9519	132	31
2530-00-980-2375	119	
2540-00-115-0512	30	35
2540-00-190-9799	33	1
2540-00-274-4509	139	3
2540-00-771-4880	139	8
2540-00-693-0634	139	9
2540-00-776-0103	139	
2540-00-960-9403	33	2
2540-00-960-9404	33	7
2590-00-050-8821	27	1
2590-00-115-0522	10	22
2590-00-133-9977	22	7
2590-00-133-9978	22	23
2590-00-133-9979	17	65
2590-00-133-9980	10	14
2590-00-133-9981	10	10
2590-00-231-6543	82	4
2590-00-307-8856	79	20
2590-00-716-7914	17	46
2590-00-752-6286	28	2
2590-00-771-0649	14	13
2610-00-726-5164	116	9
2640-00-060-3550	116	2
2640-00-088-9086	116	4
2640-00-184-3478	116	2
2640-00-240-2062	116	
2640-00-555-2827	116	4
2815-00-073-8147	70	25
2815-00-102-2585	71	5
2515-00-110-3660	70	21
2815-00-110-9592	66	14
2815-00-110-9593	67	13
2815-00-110-9594	67	5
2815-00-110-9595	67	22
2815-00-110-9596	67	8
2815-00-110-9597	67	9
2815-00-110-9598	67	1
2815-00-110-9599	76	16
2815-00-100-9600	76	20
2815-00-110-9601	70	7
2815-00-110-9616	49	10
2815-00-111-2503	76	21
2815-00-115-0224	70	3
2815-00-115-0225	69	1
2815-00-133-9982	75	9
2815-00-133-9983	75	1
2815-00-133-9986	47	1
2815-00-133-9987	68	5
2815-00-133-9988	40	1
2815-00-133-9989	66	9
	67	20
2815-00-133-9990	63	3
2815-00-133-9991	63	4
2815-00-133-9992	65	5
2815-00-133-9993	63	1
2815-00-134-0001	76	
2815-00-145-4116	75	17
2815-00-147-1935	69	
2815-00-190-8920	76	
2815-00-190-8043	76	25
2815-00-231-6272	73	8

STOCK NUMBER	FIGURE NO.	ITEM NO.
2815-00-352-3063	76	9
2815-00-352-3200	70	24
2815-00-401-9269	76	1
2815-00-456-5608	71	
2815-00-480-7358	71	7
2815-00-483-0702	71	4
2815-00-494-9334	37	1
2815-00-603-1532	88	9
2815-00-786-1564	80	1
2815-00-920-6833	70	20
2815-00-920-6834	70	23
2815-00-920-6837	70	18
2815-00-920-6840	40	18
2815-00-920-6847	12	
2815-00-920-6849	22	2
2815-00-930-5791	70	22
2815-00-930-5793	56	9
2815-00-930-5794	75	7
2815-00-930-5795	70	19
2815-00-930-5796	75	4
2815-00-930-9307	72	10
2815-00-930-9308	72	9
2815-00-930-9309	72	14
2815-00-930-9311	70	29
2815-00-930-9312	72	4
2815-00-930-9314	75	25
2815-00-930-9315	71	8
2815-00-930-9316	71	6
2815-00-930-9318	74	4
2815-00-930-9319	74	3
2815-00-930-9320	40	22
2815-00-930-9324	72	12
2815-00-930-9325	75	6
2815-00-930-9326	75	8
2815-00-930-9327	75	14
2815-00-930-9329	71	9
2815-00-930-9330	72	15
2815-00-930-9331	72	7
2815-00-930-9332	76	28
2815-00-930-9333	76	14
2815-00-930-9334	72	8
2815-00-936-8201	76	10
2815-00-953-2028	73	21
2910-00-110-9692	48	10
2910-00-110-9694	41	17
2910-00-111-2626	49	14
2910-00-111-5190	39	5
2910-00-111-5191	77	17
2910-00-128-1185	50	34
	51	11
2910-00-133-9875	41	13
2910-00-133-9876	38	28
2910-00-133-9877	52	1
2910-00-133-9878	38	9
2910-00-133-9880	77	8
2910-00-133-9881	41	21
2910-00-133-9882	41	1
2910-00-133-9883	46	5
2910-00-133-9884	45	10
2910-00-152-9874	48	1
2910-00-166-4302	77	16
2910-00-166-4303	46	1
2910-00-192-9405	52	23
2910-00-269-7126	44	14
2910-00-287-1930	45	13
2910-00-321-8737	52	33
2910-00-335-9260	44	5
2910-00-335-9312	52	22
2910-00-335-9329	50	9
2910-00-335-9331	50	43
2910-00-352-3024	47	4
2910-00-408-9391	47	16
2910-00-425-0419	78	12
2910-00-492-7306	44	10
	44	12
2910-00-510-6673	44	10
2910-00-562-9623	50	13

SECTION IV. INDEX-NATIONAL STOCK NUMBER AND REFERENCE NUMBER CROSS-REFERENCE TO FIGURE AND ITEM NUMBER

STOCK NUMBER	FIGURE NO.	ITEM NO.
2910-00-646-9727	46	12
2910-00-751-8916	50	31
2910-00-784-0330	52	44
2910-00-786-1550	50	32
2910-00-786-3964	52	20
2910-00-787-6422	52	14
2910-00-788-1988	50	39
2910-00-788-0989	50	16
2910-00-791-9437	50	41
2910-00-820-2279	45	12
2910-00-861-6890	45	18
2910-00-887-1539	52	48
2910-00-887-1546	52	19
2910-00-887-1547	52	52
2910-00-887-1548	52	18
2910-00-887-1564	52	53
2910-00-887-1572	50	5
2910-00-897-2461	52	43
2910-00-898-4926	52	30
2910-00-898-4927	52	29
2910-00-901-0749	52	28
2910-00-901-0753	52	27
2910-00-919-9739	49	5
2910-00-930-5797	48	13
2910-00-930-9358	49	7
2910-00-932-4787	51	6
2910-00-972-7959	50	15
2910-00-980-2290	52	61
2910-00-980-2306	50	22
2910-00-992-7084	52	25
2910-00-994-5504	50	46
2920-00-034-4216	62	23
2920-00-081-1646	60	5
2920-00-086-7979	61	23
2920-00-110-9695	60	1
2920-00-111-5194	59	1
2920-00-113-0693	57	12
2920-00-133-9885	57	7
2920-00-133-9886	58	14
2920-00-133-9889	57	14
2920-00-133-9890	58	1
2920-00-133-9891	29	13
2920-00-214-2341	62	9
2920-00-406-9015	58	6
2920-00-476-5454	57	4
2920-00-636-8918	61	34
2920-00-732-5220	62	7
2920-00-735-9542	81	9
2920-00-737-3225	62	
2920-00-777-7166	62	2
2920-00-807-2408	61	44
2920-00-821-2938	61	16
2920-00-821-2943	62	28
2920-00-839-1864	61	6
2920-00-865-8270	62	17
2920-00-877-2227	62	15
2920-00-888-8613	62	3
2920-00-891-3838	79	34
2920-00-894-9391	50	14
2920-00-983-6643	29	3
2920-00-999-2400	62	12
2920-00-999-2526	62	39
2924-00-132-8283	79	34
2930-00-110-9696	79	16
2930-00-111-5192	36	4
2930-00-111-5193	54	13
2930-00-112-0230	56	11
2930-00-115-0485	43	1
2930-00-133-9892	53	3
2930-00-358-5960	36	5
2930-00-133-9893	53	1
2930-00-409-3879	43	9
2930-00-459-7018	36	4
2930-00-720-2677	36	5
2930-00-812-1715	43	20
2930-00-859-4938	56	17
2930-00-920-6850	55	
2940-00-112-7804	38	1
2940-00-115-0488	38	
2940-00-128-1172	76	
2940-00-133-9876	38	
2940-00-133-9895	43	
2940-00-133-9896	43	
2940-00-367-0024	70	
2940-00-371-6579	44	
2940-00-391-3330	42	
	42	
2940-00-401-9429	42	
2940-00-580-6283	52	
2940-00-580-6513	42	
2940-00-603-4555	83	
	140	
2940-00-628-9349	45	
2940-00-832-8729	39	
2940-00-857-1982	39	
2940-00-901-1286	39	
2950-00-018-2520	103	
2950-00-018-2520	103	
2950-00-018-2191	40	
2950-00-689-3106	41	
2950-00-912-3346	41	
2950-00-912-3364	41	
2950-00-912-3371	41	
2950-00-912-3378	41	
2990-00-115-0492	40	
2990-00-133-9897	64	
2990-00-414-6976	114	
2990-00-786-3968	50	
2990-00-786-6341	50	
2990-00-897-2539	50	
2990-00-901-1307	46	
3020-00-033-6049	69	
3020-00-110-3661	67	
3020-00-114-0917	22	
3020-00-114-0988	83	
3020-00-114-0989	83	
3020-00-115-8895	57	
3020-00-540-5811	137	
3020-00-540-5885	136	
3020-00-555-7313	136	
3020-00-555-7314	136	
3020-00-555-7447	137	
3020-00-798-7540	133	
3020-00-798-7542	132	
3020-00-823-6022	62	
3020-00-847-2514	108	
3020-00-966-2528	132	
3030-00-111-5196	83	
3030-00-920-6711	83	
3030-00-920-6712	53	
3040-00-756-7965	132	
3040-00-927-5650	132	
3110-00-045-7322	105	
3110-00-051-0863	22	
	22	
3110-00-100-0260	133	
3110-00-100-6156	97	
3110-00-100-0263	136	
3110-00-100-0321	133	
	136	
3110-00-100-0573	137	
3110-00-100-0591	136	
3110-00-100-0594	132	
3110-00-100-0601	137	
3110-00-100-0608	133	
3110-00-100-0612	132	
3110-00-100-0615	133	
3110-00-100-3612	136	
3110-00-100-3621	132	
3110-00-100-3646	133	
3110-00-100-6152	17	
	90	
3110-00-100-6156	97	
3110-00-100-6159	17	
	112	

SECTION IV. INDEX-NATIONAL STOCK NUMBER AND REFERENCE NUMBER CROSS-REFERENCE TO FIGURE AND ITEM NUMBER

TOCK NUMBER	FIGURE NO.	ITEM NO.
-00-100-7335	137	22
-00-110-8740	98	6
-00-193-9049	58	2
-00-198-2848	104	24
-00-226-3498	137	30
-00-227-3505	90	7
-00-350-6446	58	5
-00-554-1310	103	12
-00-554-5302	103	1
-00-592-9967	104	11
-00-602-4448	112	10
-00-760-7353	110	10
-00-768-0551	133	20
-00-812-7801	104	13
-00-850-0443	104	16
-00-869-9585	107	1
-00-902-3744	90	16
-00-869-9585	107	1
-00-902-3744	90	16
-00-902-3754	90	1
-00-913-6116	104	26
-00-913-6117	133	30
-00-987-0630	137	26
-00-045-9358	1	6
-00-089-0187	107	17
-00-103-9788	140	10
-00-111-3679	140	19
-00-111-3680	134	7
-00-111-7369	67	4
-00-115-1392	3	13
-00-115-1393	86	8
-00-115-1394	85	8
-00-115-1395	85	17
-00-115-1396	13	9
-00-115-1397	12	23
-00-115-1398	15	35
-00-115-1399	2	6
-00-115-3036	97	15
-00-116-1464	3	8
	3	22
-00-132-6952	101	22
-00-132-6953	101	26
-00-194-2515	50	24
-00-217-9651	133	36
-00-229-0327	78	14
-00-287-6571	15	17
-00-294-2219	52	62
-00-303-4977	133	10
-00-545-3708	137	11
-00-681-9867	90	33
-00-737-3552	90	40
-00-740-9567	126	20
-00-755-6715	132	9
-00-755-7097	86	9
-00-814-8489	93	16
-00-828-6852	62	16
-00-876-9345	12	11
-00-886-6208	52	63
-00-938-0967	58	10
-00-010-0199	13	
-00-010-0202	14	
-00-010-0204	21	3
-00-010-0205	12	
-00-017-7928	1	12
-00-017-8003	1	11
-00-020-2016	17	
-00-043-5343	13	
-00-043-5344	12	
-00-045-9358	1	6
-00-066-8793	1	7
-00-110-9697	22	9
-00-115-0446	13	
-00-115-0483	72	3
-00-115-0514	19	5
-00-115-0516	12	22
-00-115-0517	12	22

STOCK NUMBER	FIGURE NO.	ITEM NO.
3805-00-115-0520	13	4
3805-00-115-0521	13	1
3805-00-134-9343	17	62
3805-00-134-9344	22	1
3805-00-134-9345	22	13
3805-00-134-9346	87	4
3805-00-139-4353	3	21
3805-00-140-3862	34	18
3805-00-256-2643	30	20
3805-00-423-0848	1	9
3805-00-454-8102	29	16
	32	2
3805-00-470-6684	1	4
3805-00-481-3438	140	8
3805-00-481-9445	98	1
3805-00-482-8932	60	2
3805-00-733-3405	123	1
3805-00-757-0186	137	1
3805-00-762-1619	30	8
3805-00-807-8432	20	
3805-00-894-7545	137	35
3805-00-900-9705	14	18
3805-00-900-9895	14	7
3805-00-909-6587	1	18
3805-00-917-8010	1	20
3805-00-927-4961	14	
3805-00-927-4963	1	8
3805-00-979-3469	17	26
3805-00-999-5905	1	19
3810-00-115-0515	12	1
3810-00-916-1925	112	21
3810-00-916-1926	112	24
3810-00-916-1932	113	22
3810-00-916-1937	112	25
3830-00-010-0205	12	
3830-00-066-4944	14	5
3830-00-066-4947	14	9
3830-00-066-4948	14	12
3830-00-075-5269	17	6
3830-00-789-8425	22	12
3830-00 852-5887	5	2
	6	7
	7	27
3830-00-930-5761	12	13
3930-00-060-4196	92	
3930-00-060-4219	92	
3930-00-069-3519	92	
3930-00-807-6730	38	
3930-00-828-3556	66	4
3930-00-904-5303	26	2
	15	29
3930-00-969-5543	101	14
4010-00-129-3221	78	6
4210-00-889-2221	139	12
4310-00-010-0207	140	
4310-00-065-1905	83	50
4310-00-294-1311	85	21
4310-00-452-9304	85	13
4320-00-056-7471	120	9
4320-00-335-9200	10	18
4320-00-656-7471	44	5
4330-00-111-2515	10	18
4330-00-168-1828	135	4
4330-00-168-1861	100	6
4330-00-217-3588	10	32
4710-00-115-0486	100	11
4710-00-115-0487	66	7
4710-00-115-0489	66	5
	44	19
4710-00-115-0490	77	25
4710-00-115-0491	77	14
4710-00-115-0493	45	5
4710-00-115-0494	99	3
4710-00-115-0495	117	9

SECTION IV. INDEX-NATIONAL STOCK NUMBER AND REFERENCE NUMBER CROSS-REFERENCE TO FIGURE AND ITEM NUMBER

STOCK NUMBER	FIGURE NO.	ITEM NO.
4710-00-115-0501	122	10
4710-00-115-0502	122	12
4710-00-115-0503	83	25
	121	1
4710-00-115-0506	6	11
4710-00-115-0507	6	12
4710-00-115-0508	6	18
4710-00-115-0509	6	4
4710-00-115-0510	6	1
4710-00-115-0524	7	22
4710-00-115-0525	7	24
4710-00-115-0526	7	25
4710-00-115-0527	8	2
4710-00-115-0528	7	8
4710-00-115-0529	7	12
4710-00-115-0530	7	28
4710-00-143-8989	47	12
4710-00-143-8991	122	13
4710-00-143-8992	122	8
4710-00-143-8993	122	1
4710-00-143-8994	6	3
4710-00-168-1810	9	5
4710-00-168-1811	75	21
4710-00-168-1813	7	9
4710-00-168-1814	47	7
4710-00-168-1815	47	8
4710-00-168-1817	7	15
4710-00-168-1818	10	4
4710-00-168-1819	5	12
4710-00-168-1820	9	8
4710-00-168-1821	12	24
4710-00-168-1822	10	8
4710-00-168-1823	47	13
4710-00-168-1824	7	21
4710-00-168-1825	47	10
4710-00-168-1844	5	13
	5	14
4710-00-168-1845	5	10
4710-00-168-1846	7	26
4710-00-168-1847	7	20
4710-00-168-1849	7	2
4710-00-168-1850	5	9
4710-00-168-1851	5	11
4710-00-168-1852	47	9
4710-00-168-1854	47	6
4710-00-168-1862	117	4
4710-00-277-5529	120	
	140	
4720-00-110-1944	36	2
4710-00-401-9416	40	6
4710-00-401-9417	4	8
4710-00-408-4593	121	2
4710-00-930-9371	40	11
4720-00-110-1942	44	2
4720-00-110-1943	77	21
4710-00-277-9581	48	
4720-00-110-1945	56	6
4720-00-110-1946	36	13
4720-00-110-1947	99	
4720-00-110-3662	38	8
4720-00-110-3663	40	3
4720-00-110-3664	40	20
4720-00-110-3665	77	5
4720-00-110-3666	99	16
4720-00-113-5484	42	
	140	
4720-00-114-0986	120	35
4720-00-114-0987	120	41
4720-00-115-0229	77	23
4720-00-115-0234	120	39
4720-00-115-0248	4	1
4720-00-115-0497	122	3
4720-00-489-5871	38	16
4720-00-541-8859	83	
4720-00-639-9899	5	
	6	
	7	
	8	
	140	
4720-00-640-0362	9	
4720-00-640-5439	10	6
4720-00-824-4373	99	
	140	
4720-00-930-4509	92	
	140	
4720-00-930-4515	92	
	140	
4720-00-930-5389	5	
	5	
	7	21
	8	
	140	
	75	
4730-00-011-4627	62	20
4730-00-011-8831	63	18
4730-00-012-7951	134	5
4730-00-014-3985	138	9
	96	5
4730-00-018-9566	112	7
	113	26
	84	2
4730-00-042-6318	85	9
	40	4
4730-00-042-8988	68	27
	72	10
	45	13
4730-00-044-4614	40	11
4730-00-044-4619	68	27
	132	9
4730-00-044-4655	136	1
	76	1
4730-00-044-4715	64	3
4730-00-044-4854	76	3
	56	4
4730-00-044-5751	134	14
4730-00-045-5835	139	6
4730-00-050-4203	1	10
4730-00-050-4208	3	21
	14	16
	93	1
	97	20
	135	1
	140	10
	40	12
4730-00-063-7920	83	19
4730-00-068-8333	81	31
4730-00-072-4877	75	13
4730-00-111-2502	47	10
4730-00-111-2505	45	11
4730-00-111-2506	45	4
4730-00-111-2507	77	9
4730-00-111-2508	56	27
4730-00-111-2509	134	5
4730-00-111-2511	138	
4730-00-111-2511	132	7
4730-00-111-2513	136	17
	116	18
4730-00-111-2519	19	3
4730-00-114-0991	7	21
4730-00-114-0992	38	18
4730-00-115-0227	9	11
4730-00-115-0250	112	2
4730-00-122-4008	77	30
4730-00-136-1889	40	30
4730-00-168-1840	99	5
4730-00-168-1842	95	18
4730-00-172-0010	96	10
	2	5
4730-00-172-0028	93	9
4730-00-172-0034	40	14
4730-00-172-8764	85	21
4730-00-168-4207	113	11
4730-00-187-4241	83	7
4730-00-192-9450	120	42
	120	6
	120	8

SECTION IV. INDEX-NATIONAL STOCK NUMBER AND REFERENCE NUMBER CROSS-REFERENCE TO FIGURE AND ITEM NUMBER

NUMBER	FIGURE NO.	ITEM NO.	STOCK NUMBER	FIGURE NO.	ITEM NO.
196-1465	120	46	4730-00-738-7543	5	
203-3551	5			6	
	6			6	19
	7			8	
222-1003	3	16	4730-00-738-7548	8	
225-0710	88	14	4730-00-761-2955	99	21
231-3014	42	10	4730-00-814-4132	46	3
231-3015	42	22	4730-00-834-5151	113	1
231-3016	4	5	4730-00-838-2378	38	17
254-6226	44	3	4730-00-848-7131	40	13
263-3123	76	29	4730-00-851-1940	75	13
263-4976	121	3	4730-00-853-1182	92	9
274-5601	128	4	4730-00-909-8627	40	2
274-9258	49	2	4730-00-913-7406	92	
277-7137	77	22	4730-00-915-5477	99	19
277-8266	120	34	.4730-00-930-4524	7	
277-8273	122	11	4730-00-930-5395	4	
278-3380	70	30	4730-00-933-0742	92	2
278-3828	117	8	4730-00-937-0492	99	
	120	10	4730-00-937-0808	44	17
	120	12	4730-00-952-0038	92	
	120	24	4730-00-964-7548	62	
	120	26	4730-00-984-0642	47	3
278-3862	99	7	4730-00-984-7175	56	13
			4730-00-985-0758	38	19
278-7778	120	5	4810-00-168-1808	112	8
278-8763	75	19	4810-00-168-1834	14	9
278-8767	117		4810-00-168-1835	18	5
	120		4810-00-168-1837	17	63
278-8886	117	6	4820-00-112-0071	76	13
279-0137	120	47	4820-00-112-0072	36	11
287-1543	117		4820-00-112-0077	19	12
	120		4820-00-112-0078	19	11
287-1649	38	15	4820-00-115-0228	38	20
287-1707	117	3	4820-00-115-0230	46	6
	122	7	4820-00-115-0239	125	
287-1766	75	18	4820-00-115-0247	10	34
289-2368	44	1	4820-00-115-0252	84	3
289-2379	40	25	4820-00-133-9974	120	27
289-2830	120	4	4820-00-142-3036	120	33
289-5176	41	22	4820-00-174-0325	77	26
	45	11	4820-00-420-8708	126	
	54	6	4820-00-738-6936	125	23
	56	4	4820-00-738-6938	125	24
	76	2	4820-00-738-6942	125	21
	84	9	4820-00-738-6945	125	20
	85	4	4820-00-849-1220	77	29
	90	31	5305-00-008-2084	34	3
	102	8	5305-00-012-1832	24	7
-289-5895	83	9	5305-00-018-0127	57	11
-335-9315	52	47	5305-00-022-7997	132	10
-391-3771	83	44		133	34
-396-2962	128	7	5305-00-042-4506	27	3
-403-0885	117	13	5305-00-042-6417	10	2
-406-6780	65	7		21	1
-415-3172	40	14		33	21
-430-4390	49	1		66	10
	83	18		94	
-433-9087	42		5305-00-042-9478	83	40
-470-6419	10	3	5305-00-053-8993	63	6
-489-5799	117	15	5305-00-059-4550	126	19
-496-7337	83	17		125	9
-516-2922	108	10	5305-00-066-0498	82	2
-537-1192	45	19	5305-00-068-0502	38	6
-568-4131	40	10		59	2
-585-8582	70	5	5305-00-068-0506	79	28
-595-2628	120	30	5305-00-068-0506	81	7
-595-4924	47	5	5307-00-068-7837	68	13
-614-0205	118	16	5305-00-069-5571	77	7
	119	16	5305-00-069-5572	45	3
-639-9730	83	21	5305-00-069-5574	5	24
	7	6		8	3
-640-6330	44	9		43	7
-653-7073	104	4		83	38
-701-7737	75	12		90	47
-702-2750	10	5	5305-00-069-5575	104	8
-702-2750	83	26	5305-00-068-5580	56	3

SECTION IV. INDEX-NATIONAL STOCK NUMBER AND REFERENCE NUMBER CROSS-REFERENCE TO FIGURE AND ITEM NUMBER

STOCK NUMBER	FIGURE NO.	ITEM NO.
5305-00-071-1774	66	12
5305-00-071-2066	102	1
5305-00-071-2235	100	17
5305-00-071-2242	47	19
	82	8
5305-00-076-9769	75	5
5305-00-104-3573	90	38
5305-00-111-5554	70	27
5305-00-111-5559	70	26
5305-00-112-9366	17	24
5305-00-115-6179	16	8
5305-00-125-6193	52	50
5305-00-137-3186	51	1
5305-00-156-2937	52	15
5305-00-206-0996	15	2
	15	2
	15	7
	30	6
5305-00-207-2226	133	16
5305-00-207-2279	1	15
5305-00-225-3839	46	7
5305-00-225-3940	125	43
5305-00-225-8507	87	1
5305-00-225-9081	42	14
5305-00-226-7768	5	17
5305-00-229-0417	66	3
	66	8
5305-00-235-6075	58	15
5305-00-240-6750	52	10
5305-00-240-6754	51	13
5305-00-240-6816	48	4
5305-00-248-5969	76	26
5305-00-248-5970	71	10
5305-00-252-5330	1	16
5305-00-253-5606	52	
5305-00-253-5615		4
5305-00-267-8974	120	38
5305-00-267-8977	28	1
	121	6
5305-00-269-2801	124	1
5305-00-269-2803	6	16
	8	8
	30	4
	30	28
	30	29
	30	30
	31	3
	38	21
	118	29
	119	29
5305-00-269-2805	10	35
	33	12
5305-00-269-2807	10	11
5305-00-269-2808	114	23
5305-00-269-2809	73	15
5305-00-269-2814	5	16
	98	7
5305-00-269-3208	33	6
	45	6
	113	3
5305-00-269-3209	6	9
	7	5
	7	13
	15	31
	24	12
	29	12
	32	4
	34	17
	65	8
	70	15
	81	14
	90	44
	92	6
5305-00-269-3210	42	17
	65	6
5305-00-269-3210	76	19
	85	2
	113	15

STOCK NUMBER	FIGURE NO.	ITEM NO.
5305-00-269-3211	6	5
5305-00-269-3211	31	6
	40	8
	65	2
	73	11
	99	13
	112	3
5305-00-269-3212	54	11
	55	3
	64	4
	73	3
	113	21
	140	13
5305-00-269-3215	30	11
5305-00-269-3214	15	32
	36	14
	54	7
	76	22
	100	13
	118	11
5305-00-269-3216	111	1
	29A	14
5305-00-269-3218	112	1
5305-00-269-3220	111	12
5305-00-269-3221	90	23
5305-00-269-3222	73	18
5305-00-269-3242	102	11
5305-00-269-3250	18	1
5305-00-269-4511	57	9
5305-00-292-4994	137	34
5305-00-297-0724	72	1
5305-00-499-9360	90	26
5305-00-543-2753	61	40
5305-00-716-8181	2	8
	107	13
5305-00-719-5219	69	3
5305-00-719-5235	137	10
5305-00-724-5910	113	29
5305-00-725-4090	136	37
5305-00-725-4098	101	28
5305-00-725-4105	34	12
5305-00-725-4133	34	15
	37	7
5305-00-725-4137	140	6
5305-00-725-4183	37	2
5305-00-725-4187	30	17
	91	15
5305-00-726-2552	77	1
5305-00-726-2556	127	17
	136	11
5305-00-726-2567	126	18
5305-00-726-2568	126	21
5305-00-727-3804	60	4
5305-00-753-4322	17	69
5305-00-758-8114	61	9
5305-00-758-8116	61	39
5305-00-761-4227	10	31
	16	7
5305-00-781-3924	29	10
	99	5
5305-00-786-4028	52	39
5305-00-786-4032	52	42
5305-00-826-6018	50	33
5305-00-846-5703	43	13
	78	2
	94	1
5305-00-855-0959	89	5
5305-00-891-8979	50	27
5305-00-896-9733	137	18
5305-00-898-5107	137	41
5305-00-899-3002	24	9
5305-00-912-4819	44	4
5305-00-948-0803	98	9
5305-00-961-6507	39	4
5305-00-969-6017	132	36
5305-00-978-9381	125	11
5305-00-983-7452	7	16
5305-00-984-6211	140	

SECTION III. NATIONAL STOCK NUMBER AND PART NUMBER
CROSS-REFERENCE TO FIGURE AND ITEM NUMBER

NUMBER	FIGURE NO.	ITEM NO.
993-8688	50	37
993-8748	52	12
018-0084	48	15
085-3065	105	6
089-1530	29	18
111-3763	135	1
111-3797	140	2
115-6249	133	5
115-6250	48	18
143-3074	132	2
145-0876	73	24
225-8496	119	4
	118	4
225-8497	17	66
225-8498	83	34
225-8499	67	12
	67	23
-225-8500	57	6
-225-8504	83	29
-225-8505	67	19
-225-8506	66	13
-225-9084	95	7
	96	2
	97	4
-225-9088	100	18
-225-9089	33	8
	114	18
	120	23
	124	5
	125	46
-225-9094	114	24
	120	19
-225-9097	120	22
-231-7717	58	
-292-3108	137	7
-292-3109	137	5
-292-4588	115	8
-438-5126	75	16
-439-4999	73	17
-443-1955	133	42
-550-9129	61	32
	62	21
-579-0463	132	15
	136	16
-616-2015	108	9
-679-8109	103	9
-701-3050	127	11
-712-3285	84	4
-717-9637	1	10
-775-5209	61	43
-783-5183	62	14
-783-5188	62	19
-834-8450	85	18
-846-5699	132	26
-896-9724	15	9
-940-9011	104	18
-940-9018	107	11
-940-9052	115	7
-115-1552	40	17
-400-3643	134	4
-400-8670	73	9
-404-4782	22	17
-842-8365	138	10
-950-3031	134	5
-011-4380	100	8
-012-0367	120	43
	121	4
-016-7142	110	1
-021-8487	133	15
	137	16
-045-3296	61	12
	27	2
	44	6
-045-3299	24	8
	61	33
-050-3520	139	5
-056-3395	29A	15
-059-9264	14	3

STOCK NUMBER	FIGURE NO.	ITEM NO.
5310-00-062-2051	61	7
5310-00-068-8067	91	14
5310-00-080-6004	18	2
	29	1
	29	22
	30	3
	30	23
	30	27
	32	5
	33	5
	36	22
	40	30
	49	11
	54	9
	55	4
	64	6
	65	4
	70	12
5310-00-080-6004	73	5
	73	16
	77	10
5310-00-081-2558	62	31
5310-00-081-4219	42	13
	57	3
	100	3
	114	17
5310-00-087-7493	34	6
5310-00-090-0819	90	
5310-00-110-2761	54	2
5310-00-110-2762	70	2
5310-00-111-0801	126	15
5310-00-111-0802	136	33
5310-00-115-1497	58	24
5310-00-115-6213	14	14
5310-00-115-6215	96	11
5310-00-115-6224	57	17
5310-00-115-6225	58	23
5310-00-115-6229	41	3
5310-00-115-6231	1	13
5310-00-115-6233	40	15
5310-00-115-6234	75	23
5310-00-115-6239	72	2
5310-00-115-6241	96	12
5310-00-119-1639	97	13
5310-00-143-6351	75	24
5310-00-173-0118	58	19
5310-00-173-3072	58	16
5310-00-203-1110	110	2
5310-00-205-9120	126	9
5310-00-205-9217	2	4
	10	28
	11	9
	16	3
	30	19
	69	9
	74	2
5310-00-249-5268	136	10
5310-00-268-6039	133	17
5310-00-269-6493	137	38
5310-00-275-1974	117	12
5310-00-275-6635	137	36
5310-00-286-3727	61	18
5310-00-291-4498	62	26
5310-00-297-7319	25	9
5310-00-350-2655	96	9
5310-00-350-4439	77	3
5310-00-378-0833	48	5
5310-00-400-8503	3	6
5310-00-400-8504	48	11
5310-00-400-8505	71	11
5310-00-400-8524	62	13
5310-00-498-2965	29	2
5310-00-543-4717	28	3
5310-00-582-5965	38	3
	46	9
	47	17
	59	3

SECTION IV. INDEX-NATIONAL STOCK NUMBER AND REFERENCE NUMBER
CROSS-REFERENCE TO FIGURE AND ITEM NUMBER

STOCK NUMBER	FIGURE NO.	ITEM NO.
	68	11
10-00-582-5965	70	13
	81	5
	82	10
	100	
	100	7
	121	5
	123	11
	125	42
	140	
10-00-584-5272	2	5
	9	3
	10	1
	10	29
	11	8
	16	4
	21	2
	29	9
	30	18
	33	18
	43	4
	43	17
	66	11
	89	8
	91	3
	94	
	99	4
10-00-584-5272	101	23
	132	11
	136	12
	68	8
10-00-594-8038	132	14
	136	15
10-00-596-0608	137	15
10-00-637-0244	135	9
10-00-637-9541	6	6
	7	14
	12	14
	15	3
	18	3
	30	2
	30	10
	30	22
	30	26
	31	2
	32	6
	33	14
	38	23
	40	7
	54	8
	54	10
	57	5
	57	8
	65	3
	75	2
	5	5
	7	4
	10	12
	11	6
	24	11
	29	14
	29	21
	34	5
	40	29
	42	16
	43	12
	44	21
	45	7
	49	4
	49	12
	53	5
	64	5
	70	11
	73	4
	76	18
	77	12
	81	15

STOCK NUMBER	FIGURE NO.	ITEM NO.
5310-00-637-9541	82	5
	85	3
	90	24
	90	43
	94	2
	99	11
	100	14
	101	5
	111	2
	112	2
	113	14
	113	20
	114	4
	118	10
	118	31
	119	10
	119	31
	124	2
	128	5
5310-00-655-9860	82	
5310-00-700-0667	90	36
5310-00-723-4458	47	18
5310-00-732-0560	101	25
5310-00-752-7673	62	32
5310-00-753-5081	133	38
5310-00-754-2005	90	35
5310-00-754-2340	132	7
5310-00-761-6882	125	12
5310-00-763-8920	1	14
5310-00-768-0251	90	14
5310-00-777-6325	26	7
5310-00-784-3153	61	29
	62	34
5310-00-792-9785	85	19
5310-00-796-8638	50	7
	52	40
5310-00-809-3078	46	8
	117	10
5310-00-809-4058	81	8
5310-00-809-4085	45	1
5310-00-809-8533	15	38
5310-00-809-8541	101	11
5310-00-820-6652	29A	16
5310-00-820-6653	60	3
	26	6
5310-00-820-8059	132	30
5310-00-822-2241	61	3
5310-00-822-2236	61	5
5310-00-823-8803	34	14
	91	10
5310-00-830-7825	50	4
5310-00-833-8567	25	5
5310-00-835-2036	78	11
	114	20
5310-00-877-4952	50	21
5310-00-877-4956	50	26
5310-00-877-5795	37	5
	5	18
5310-00-879-6493	90	20
5310-00-891-5703	50	35
	51	10
5310-00-897-3442	13	17
5310-00-932-0848	90	5
5310-00-934-9751	40	16
5310-00-950-0039	98	2
5310-00-951-7209	37	8
	77	2
5310-00-964-0103	132	32
5310-00-965-6000	61	1
5310-00-971-7989	78	8
5310-00-982-4974	138	1
5310-00-982-6809	30	14
	34	13
	37	9
	77	32
	113	26
5310-00-982-6810	98	9
5310-00-982-6816	107	6
5310-00-984-3807	102	5

UMBER	FIGURE NO.	ITEM NO.
6-8818	131	2
6-8818	135	12
	139	2
3-5023	137	19
0-3389	133	37
0-3496	101	18
	114	7
0-8433	126	10
1-2129	68	4
1-2139	72	5
	72	6
2-0123	83	2
2-4553	75	26
3-7214	133	39
1-0809	48	9
5-1487	3	19
5-1488	124	10
5-1489	3	12
5-1491	15	18
5-1498	3	20
5-6267	15	12
5-6270	41	23
5-6299	2	1
9-3617	3	17
4-2346	107	3
6-8353	78	4
	125	18
6-8359	114	6
8-1481	91	12
	101	20
8-1499	139	6
8-2448	68	3
1-5085	92	11
7-2723	137	17
7-6079	127	7
6-5525	52	5
3-3894	67	15
1-6532	101	29
9-5822	1	1
	15	14
	92	10
2-8203	126	13
9-5582	139	14
8-7125	1	2
0-4944	126	19
0-6042	1	23
2-0857	1	3
5-8995	1	22
8-9883	127	
8-9885	126	
2-6147	25	6
9-8730	90	18
2-0569	19	9
1-8538	51	18
1-8958	125	37
0-0213	43	23
5-4165	112	17
10-5674	41	14
10-5676	55	6
10-5677	65	1
10-5685	5	3
	6	8
	7	1
	12	12
10-5687	68	1
10-5689	54	3
10-5690	49	9
10-5691	41	2
10-5692	40	26
10-5693	97	14
10-5694	100	12
10-5698	91	9
10-8744	54	4
10-8751	132	19
10-8756	127	14
10-8777	134	1
11-0733	43	2

STOCK NUMBER	FIGURE NO.	ITEM NO.
5330-00-111-0736	43	8
5330-00-111-0739	73	2
5330-00-111-5128	111	8
5330-00-111-5129	138	3
5330-00-113-8352	98	4
5330-00-115-1454	123	4
5330-00-115-1455	123	3
5330-00-115-1456	10	9
5330-00-115-1457	9	1
5330-00-115-1459	19	16
5330-00-115-1466	17	18
5330-00-115-1467	10	17
5330-00-115-1468	19	2
5330-00-115-1504	19	23
5330-00-115-1509	83	41
5330-00-115-1510	83	36
5330-00-115-3061	17	40
5330-00-115-3066	17	61
5330-00-115-3070	17	37
5330-00-115-3072	17	71
5330-00-115-6150	17	38
5330-00-115-6152	112	27
5330-00-115-6169	17	44
5330-00-115-6171	89	3
5330-00-116-5813	94	14
5330-00-116-9814	94	15
5330-00-116-5815	94	17
5330-00-116-5817	94	12
5330-00-116-5818	94	5
5330-00-118-2919	90	2
5330-00-128-1170	50	
5330-00-135-8822	42	
5330-00-143-8666	137	32
5330-00-171-5641	52	31
5330-00-202-3848	73	
5330-00-215-7348	86	3
	86	4
5330-00-225-0707	88	8
5330-00-225-9122	14	6
5330-00-228-2950	19	19
5330-00-236-1430	17	32
	17	58
5330-00-253-8262	93	18
5330-00-290-9311	62	24
5330-00-285-9480	62	30
5330-00-286-7121	86	1
5330-00-291-1652	133	32
5330-00-291-4645	118	20
	119	20
5330-00-291-8977	84	6
5330-00-297-7106	23	3
5330-00-311-5189	113	12
5330-00-311-5305	95	4
	98	8
5330-00-325-2499	136	20
5330-00-401-5135	43	19
5330-00-402-5849	83	22
5330-00-404-8155	90	41
5330-00-406-3739	68	6
5330-00-408-6005	56	15
5330-00-422-7694	86	7
5330-00-445-2984	62	37
5330-00-452-1340	94	16
5330-00-470-9066	58	11
5330-00-492-1023	68	2
5330-00-506-3975	52	13
5330-00-531-3197	52	13
5330-00-550-7312	44	13
5330-00-550-7315	61	8
5330-00-579-6495	17	39
	17	43
5330-00-589-5870	136	5
5330-00-599-2321	62	
5330-00-599-6200	113	
5330-00-601-4932	17	54
5330-00-631-8125	102	7
5330-00-640-9399	50	10

SECTION IV. INDEX-NATIONAL STOCK NUMBER AND REFERENCE NUMBER CROSS-REFERENCE TO FIGURE AND ITEM NUMBER

STOCK NUMBER	FIGURE NO.	ITEM NO.
5330-00-641-8282	50	25
5330-00-641-8282	50	36
	51	9
5330-00-641-8283	51	12
	52	36
5330-00-641-8286	50	42
5330-00-641-8291	52	56
5330-00-663-4773	45	15
5330-00-693-1940	84	7
5330-00-718-7385	42	3
5330-00-737-4265	112	22
5330-00-738-5915	125	26
5330-00-757-1580	52	8
5330-00-770-9136	14	2
5330-00-770-9138	14	10
5330-00-787-8724	113	
5330-00-786-4025	50	11
5330-00-789-6645	48	3
5330-00-798-7553	126	14
5330-00-804-5695	77	31
5330-00-809-1052	22	8
5330-00-842-1901	62	25
5330-00-842-8341	14	16
5330-00-849-6979	14	11
5330-00-851-6921	136	14
5330-00-853-2376	52	26
5330-00-869-4226	106	7
5330-00-871-3713	14	8
5330-00-876-8739	102	
5330-00-877-4972	52	7
5330-00-883-8221	77	28
5330-00-896-9727	132	5
5330-00-914-0703	61	41
	62	
5330-00-918-9594	133	31
5330-00-919-2235	103	13
5330-00-920-6835	70	4
5330-00-929-9049	99	20
	99	22
5330-00-930-5793	56	9
5330-00-930-9270	71	3
5330-00-932-0860	85	20
	113	9
5330-00-932-0864	111	3
5330-00-936-4587	51	16
5330-00-936-5239	73	14
5330-00-941-4569	111	5
5330-00-947-3579	99	1
5330-00-964-0096	132	13
5330-00-964-6318	39	6
5330-00-972-8204	116	6
5330-00-974-6643	51	7
5330-00-980-9007	85	20
5330-00-984-3750	17	72
5330-00-997-9020	62	29
5340-00-110-5678	41	19
5340-00-110-5680	47	2
5340-00-110-5700	116	7
5340-00-110-5701	116	8
5340-00-114-2118	41	11
5340-00-115-1422	125	2
5340-00-115-1423	125	32
5340-00-115-1424	125	35
5340-00-115-1427	84	8
5340-00-115-1469	15	13
5340-00-115-1480	133	27
5340-00-115-1482	133	27
	133	27
5340-00-115-1484	133	27
5340-00-115-1525	77	64
5340-00-115-1526	17	59
5340-00-115-3058	19	14
5340-00-115-3059	17	45
5340-00-115-3077	17	36
5340-00-115-3078	17	21
5340-00-115-6126	47	15
5340-00-115-6142	17	49

STOCK NUMBER	FIGURE NO.	ITEM NO.
5340-00-116-5823	34	11
5340-00-132-3645	67	
5340-00-133-3660	120	14
5340-00-228-2982	70	31
5340-00-276-5853	40	31
5340-00-282-1668	61	31
5340-00-335-9299	51	14
5340-00-351-0183	114	8
5340-00-414-6976	114	12
5340-00-446-3269	36	7
5340-00-592-3899	85	7
5340-00-592-7996	82	
5340-00-704-9603	139	7
5340-00-715-7391	133	19
	137	21
5340-00-720-6213	120	40
5340-00-737-6869	90	27
5340-00-738-7552	88	2
5340-00-767-6424	50	45
5340-00-786-4027	52	21
5340-00-891-6136	47	21
5340-00-933-0698	39	2
5340-00-955-0319	79	2
5355-00-812-4141	101	1
5360-00-052-1531	48	6
5360-00-079-1940	88	5
5350-00-105-9824	112	49
5360-00-115-3998	112	15
5360-00-137-3202	51	2
5360-00-138-9815	51	3
5360-00-225-0706	88	3
5360-00-225-0709	88	11
5360-00-292-3004	127	6
5360-00-335-9327	50	18
5360-00-598-9900	76	8
5360-00-629-6190	115	4
5360-00-660-0657	33	6
5360-00-691-7207	50	12
5360-00-721-5333	62	10
5360-00-754-2213	61	10
5360-00-784-0348	50	23
5360-00-812-0196	61	4
5360-00-816-8227	50	44
5360-00-841-2267	78	15
5360-00-887-1536	52	2
5360-00-897-3433	126	6
5360-00-900-2564	52	24
5360-00-922-6228	109	5
5360-00-930-9363	52	34
5365-00-090-5426	82	
5365-00-098-2201	90	
5365-00-111-5549	136	29
5365-00-115-1474	41	6
5365-00-115-1527	41	8
5365-00-115-1528	41	8
5365-00-115-3054	13	16
5365-00-115-6140	140	15
5365-00-215-7421	83	20
5365-00-281-6452	104	12
	107	4
5365-00-353-9839	61	15
5365-00-358-9942	127	15
5365-00-377-8811	137	24
5365-00-377-8812	137	23
5365-00-401-1999	71	7
5365-00-401-2033	71	1
5365-00-401-2034	71	1
5365-00-401-2035	71	1
5365-00-598-1070	19	20
5365-00-715-1152	61	2
	62	22
5365-00-772-2323	82	
5365-00-776-7238	112	7
5365-00-784-0042	45	14
5365-00-804-7697	93	17
5365-00-820-8064	132	28
5365-00-897-3434	126	17

SECTION IV. INDEX-NATIONAL STOCK NUMBER AND REFERENCE NUMBER CROSS-REFERENCE TO FIGURE AND ITEM NUMBER

STOCK NUMBER	FIGURE NO.	ITEM NO.
5365-00-957-1826	61	42
	62	
5365-00-922-8692	108	12
	109	3
5905-00-134-9821	82	13
5925-00-111-5063	79	19
5925-00-520-4666	82	7
5925-00-283-6511	79	12
5930-00-126-1159	130	
5930-00-296-6318	79	18
5930-00-485-9000	81	2
5930-00-501-1707	81	12
5930-00-688-9882	81	1
5930-00-699-9438	79	16
5935-00-111-8416	24	5
5935-00-333-9414	82	
5935-00-572-9180	25	4
5935-00-686-2599	82	
5935-00-686-2600	82	
5935-00-771-6884	82	
5935-00-772-3309	82	
5935-00-807-4109	25	7
5935-00-811-0942	82	
5935-00-814-7432	82	9
5935-00-821-2944	62	35
5940-00-246-4891	29	6
5945-00-409-3883	82	12
5961-00-111-5066	58	22
5961-00-111-5067	58	7
5961-00-111-5068	58	9
5970-00-034-5015	62	
5970-00-136-1335	58	8
5970-00-136-1335	58	20
5970-00-144-7307	58	17
5970-00-353-9842	61	36
5970-00-401-4610	58	21
5970-00-416-4104	61	19
5970-00-657-8133	62	38
5970-00-734-8918	61	26
5970-00-734-8918	61	26
5970-00-734-8919	61	27
5975-00-771-6634	82	
5977-00-116-3625	58	13
5977-00-284-7628	61	14
5977-00-754-8153	61	13
5977-00-786-9564	61	21
6140-00-057-2554	29	25
6140-00-135-0223	29	5
6140-00-135-0224	29	24
6140-00-135-0225	29	7
6140-00-490-1155	79	1
6210-00-800-4776	79	8
6220-00-337-6471	23	1
6220-00-368-4945	23	8
	24	6
6220-00-678-9046	25	1
6220-00-693-4175	25	12
6220-00-695-1107	25	2
6220-00-752-6018	23	2
6220-00-788-9943	26	3
6220-00-819-7028	25	3
6220-00-880-1237	24	1
6220-00-903-6647	24	2
6220-00-904-0156	24	1
6220-00-953-4652	26	1
6220-00-953-4653	26	1
6240-00-019-0877	23	4
6240-00-019-3093	79	6
6240-00-044-6914	24	10
6240-00-295-2668	24	4
6240-00-553-1038	79	9
6240-00-727-8573	26	4
6250-00-353-0955	23	5
6350-00-899-4527	79	15
6620-00-869-7247	79	25
6620-00-954-8685	56	16
6625-00-168-0488	79	32
6645-00-089-8842	80	2
6680-00-110-3966	99	2
6680-00-113-0728	76	15
6680-00-115-0523	10	7
6680-00-465-1574	77	15
6685-00-133-7521	79	29
6685-00-133-7522	79	31
6685-00-453-9013	79	24
6810-00-249-9354	29	
9905-00-205-2795	35	1

REFERENCE No.	MFG CODE	FIGURE NO.	ITEM NO.
AA1049-14	70417	15	17
AB24-9L	51588	93	16
AC1199V749	63477	128	1
AC2003	17460	118	8
	17460	119	8
AC2009	17460	118	16
	17460	119	16
AC2019	17460	119	14
AC2C20	17460	118	14
AC23540	63477	120	27
AC24212	63477	125	26
AC2812	17460	119	9
AC2826	17460	119	7
AC2828	17460	118	7
AC2834	1746C	118	13
	17460	119	13
AC2836	17460	119	6
AC2837	17460	118	6
AC2868	17460	118	2
AC2869	17460	119	2
AC3074	17460	119	
AC30750	17460	118	
AC31706	63477	125	5
AC31768	63477	124	10
	63477	125	16
AC31769	63477	125	14
AC37438	63477	125	20
AC37448	63477	125	21
AC37453	63477	125	22
AC37454	63477	125	24
AC37455	63477	125	23
AC39213	63477	125	
AC39875	63477	125	7
AC39876	63477	125	2
AC39878	63477	125	8
AC42170	63477	125	17
AC42171	63477	124	9
	63477	125	9
	63477	125	10
AC43886	17460	118	15
	17460	119	15
AC43887	17460	118	17
	17460	119	17
AC45267	63477	125	6
AC48381	63477	125	3
AC48382	63477	125	4
AC48383	63477	125	34
AC48387	63477	125	28
AC48388	63477	125	31
AC48369	63477	125	36
AC38370	63477	125	
AC48371	63477	125	39
AC48372	63477	125	40
AC48373	63477	125	37
AC48374	63477	125	38
AC48375	63477	125	35
AC48376	63477	125	32
AC48377	63477	125	25
AC48378	63477	125	27
AC48379	63477	125	30
AC49595	63477	125	13
AC70128	17460	117	16
AD1778	17460	118	5
AC1779	17460	119	5
AD1931	17460	118	9
AD48366	63477	125	33
AD48382	63477	124	12
	63477	125	15
A0833	17460	119	1
AE1402-10	13829	22	17
AE482365	63477	125	1
AE70242	17460	118	30
	17460	119	30
AE834	17460	118	1
AJ28922	80648	22	6
	80648	22	14
AJ28922	80648	22	21

REFERENCE No.	MFG CODE	FIGURE NO.	ITE NO
AN737RM46	88044	83	
A1008X14	02892	19	1
A1008X214	02892	19	2
A1008X222	02892	19	
A1022X23	02892	94	1
A1022X55	02892	94	1
A1023X5	02892	94	1
A1199V749	02397	128	
A12050515	78500	137	3
A14	05657	40	1
A1805880	78500	133	3
A1898F1C72	79780	134	
	79780	138	
A2-3200K765	78500	133	1
A2-3200Z780	79780	137	2
A20-3822854	79780	127	
A229W1557	79780	137	4
A2297S97	79780	126	1
A282706	00000	95	
A282748	00000	129	
A3A44255A01	94990	58	
A31-3200Z780	79780	137	
A3200K765	79780	133	
A3226M117	78500	137	2
A3226Z130	79780	133	2
A3235W777	79780	133	
A3235X882	79780	133	
A3266E83	79780	137	3
A3266R86	78500	133	3
A3280B2342	78500	137	3
A3280X1714	79780	133	3
A33-3222-U-957	79780	126	
A35614	79780	133	
A3911A313	79780	126	1
A3911H346	79780	127	1
A395X12	02892	19	
A419X5	02892	94	
A48-3235M351	79780	137	
A501X303	02892	19	
A501X365	02892	19	
A501X616	02892	19	
A515X11	02892	19	
A554X10	02892	94	
A8-3235W777	79780	133	
A848X64	02892	19	
A908X4	02892	94	
A93235W777	79780	133	
A991X6	02892	94	
BA3026-1	92392	22	
B2	06229	82	
CAT219	02892	94	
CP58N4	79780	95	
CP6N	70960	96	
	70960	97	
C2032	76359	33	
C2080-88	76359	33	
C2106	76359	33	
DCGFC631-3FW	84760	49	
DV13C1A20	02892	18	
D230-29	13829	21	
D230-29B1	13829	22	
D230-29D	13829	22	
D230-29F50B278	13829	22	
D827-61	76359	33	
EX2685	92392	79	
EX2687	74400	79	
EX2689	74400	79	
EX2691	92392	79	
E2860	76359	33	
FC1030	63477	128	
FC107-10	01276	140	
FC107-12	01276	140	
FC11438	63477	128	
FC1318	17460	118	
FC1321	17460	118	
FC1330	17460	118	

SECTION IV. INDEX-FEDERAL STOCK NUMBER AND REFERENCE NUMBER CROSS-REFERENCE TO FIGURE AND ITEM NUMBER

REFERENCE No.	MFG CODE	FIGURE NO.	ITEM NO.
FC1338	17460	118	25
FC1408	17460	126	5
FC14425	17460	119	22
FC14426	17460	118	22
FC15278	63477	125	29
FC18299	17460	118	19
	17460	119	19
FC24198	63477	125	41
FC3208	63477	130	4
FC33245	17460	119	
FC3354	63477	128	7
FC5922	17460	118	20
	17460	119	20
FC602	63477	128	8
FC603	63477	128	2
FC6980	63477	130	1
FC8457	79780	130	
FC928	17460	119	27
FC929	17460	119	28
FC932	17460	119	23
FC943	17460	119	25
FC9434-16-94	01276	7	
FC9436-16-94	01276	5	
	01276	8	
FC9438-2016-94	01276	8	
FC9437-2016-94	01276	8	
FC9439-2016-94	01276	8	
FC9440	01276	8	
FD1237	63477	130	2
FD1311	17460	119	24
FD1387	17460	118	24
FD2230	63477	130	3
FD2704	17460	118	21
FD344	17460	119	26
FD4570	17460	119	21
FD6630	63477	130	
FD682	63477	129	4
FD962	17460	118	26
FE1310	17460	119	18
FE677	17460	118	18
FRE7	57448	78	14
FW612-0061	18265	38	28
HP808	06631	83	7
HV10921	21102	44	12
H12420	99103	99	18
J6642-7	76005	36	7
K81685-3	13829	22	4
LP1058	61112	46	11
LP2773-15	61112	46	5
LP2814	61112	46	
LP2974R	61112	46	
LP3235-9	61112	46	6
LP3864R72	61112	46	1
LP535-1	61112	46	12
MA1006M15	13829	22	22
MA1688-26	13829	22	11
MH24N901G	94990	57	12
MS1044LN10	96906	30	14
MS15001-1	96906	139	10
MS15002-1	96906	95	10
	96906	96	5
MS15003-1	96906	14	1
	96906	93	20
	96906	97	1
	96906	135	10
	96906	140	12
MS15006-6	96906	93	14
MS15795-12	96906	120	16
MS15795-14	96906	18	2
	96906	29	1
	96906	29	22
	96906	30	3
	96906	30	23
	96906	30	27
	96906	32	5
	96906	34	6
	96906	38	22

REFERENCE No.	MFG CODE	FIGURE NO.	ITEM NO.
	96906	65	4
	96906	70	12
	96906	77	10
	96906	101	24
MS15785-15	96906	31	8
	96906	33	13
MS15795-15	96906	36	15
MS15795-16	96906	104	10
MS15795-18	96906	10	30
	96906	16	6
MS16795-19	96906	33	20
	96906	36	9
	96906	89	7
MS15795-20	96906	34	14
	96906	91	10
MS15795-31	96906	139	2
MS15795-15	96906	15	4
MS16203-15	96906	57	1
MS16536-172	96906	127	
MS16536-176	96906	126	
MS16562-161	96906	101	29
MS16562-238	96906	67	15
MS16997-63	96906	125	11
MS16998-78	96906	7	16
MS17829-8F	96906	91	14
MS20364-1018A	96906	140	14
MS20364-524A	96906	120	15
MS20822-10	96906	42	10
MS20822-10-12	96906	42	22
MS21044D5	96906	107	6
MS21044LN10	96906	34	13
	96906	37	9
	96906	77	32
	96906	113	26
MS21044N12	96906	98	8
MS21044N6	96906	98	2
MS21044N8	96906	36	10
	96906	37	5
MS21045C6	96906	14	3
MS21045C8	96906	138	1
MS21083N20	96906	110	1
MS21318-7	96906	52	
MS21920-28R	96906	38	17
MS21920-39	96906	38	19
MS24400C8	96906	137	19
MS24629-41	96906	89	5
MS24665-303	96906	124	11
MS24665-306	96906	78	4
	96906	125	18
MS24665-353	96906	1	1
	96906	15	14
	96906	92	10
MS24665-355	96906	83	2
MS24665-357	96906	91	12
	96906	101	20
MS24655-360	96906	139	6
MS24665-370	96906	114	6
MS24665-502	96906	139	14
MS25690-505	96906	49	13
MS27183-10	96906	81	8
MS27183-11	96906	46	8
	96906	117	10
MS27183-12	96906	42	13
	96906	57	3
	96906	100	3
	96906	114	17
MS27183-14	96906	33	5
	96906	40	16
	96906	40	30
	96906	49	11
	96906	54	9
	96906	55	4
	96906	64	6
	96906	73	5
	96906	73	16
MS27183-16	96906	45	1
MS27183-22	96906	30	13

SECTION IV. INDEX-NATIONAL STOCK NUMBER AND REFERENCE NUMBER CROSS-REFERENCE TO FIGURE AND ITEM NUMBER

REFERENCE No.	MFG CODE	FIGURE NO.	ITEM NO.
MS27183-22	96906	77	2
	96906	113	27
MS27183-23	96906	15	38
MS27183-27	96906	101	11
MS27183-32	96906	131	2
	96906	135	12
MS28778-6	96906	77	31
MS35000-3	96906	29	25
MS35206-242	96906	23	6
	96906	24	9
	96906	61	11
MS35241-34	96906	125	19
MS35276-276	96906	44	4
MS35294-64	96906	73	20
MS35295-4	96906	104	28
MS35295-71	96906	54	12
MS35297-111	96906	9	4
	96906	68	8
	96906	91	2
MS35297-112	96906	43	3
MS35297-118	96906	43	14
MS35297-73	96906	57	10
	96906	75	3
	96906	94	18
MS35297-83	96906	77	7
MS35297-86	96906	56	7
MS35297-91	96906	54	1
MS35297-95	96906	43	5
MS35298-116	96906	36	6
MS35298-64	96906	44	22
MS35301-62	96906	5	4
	96906	11	5
	96906	12	15
	96906	29	23
	96906	40	28
	96906	77	9
	96906	99	12
MS35303-121	96906	74	1
MS35304-74	96906	53	6
MS35335-9	96906	16	1
MS35337-25	96906	120	42
MS35337-6	96906	123	11
MS35338-10	96906	2	5
	96906	9	3
	96906	10	1
	96906	10	29
	96906	11	8
	96906	16	4
	96906	21	2
	96906	30	18
	96906	33	18
	96906	43	17
	96906	66	11
	96906	89	8
	96906	91	3
	96906	94	
	96906	99	4
	96906	101	23
	96906	132	11
	96906	136	12
MS35338-12	96906	26	6
	96906	101	27
	96906	113	30
	96906	135	8
MS35338-14	96906	90	35
MS35338-4	96906	92	7
MS35338-42	96906	24	8
MS35338-46	96906	6	6
	96906	7	14
	96906	12	14
	96906	15	3
	96906	18	3
	96906	30	2
	96906	30	10
	96906	30	22
	96906	30	26
	96906	30	32

REFERENCE No.	MFG CODE	FIGURE NO.	IT N
MS35338-46	96906	31	
	96906	32	
	96906	33	
	96906	90	
	96906	90	
	96906	94	
	96906	99	
	96906	100	
	96906	101	
	96906	111	
	96906	112	
	96906	113	
	96906	113	
	96906	114	
	96906	116	
	96906	118	
	96906	119	
	96906	119	
	96906	124	
	96906	128	
MS35338-48	96906	68	
MS35338-5	96906	44	
MS35338-6	96906	121	
	96906	125	
	96906	140	
MS35338-60	96906	60	
MS35338-7	96906	33	
	96906	42	
	96906	47	
	96906	48	
	96906	57	
	96906	66	
	96906	67	
	96906	83	
	96906	86	
	96906	87	
	96906	100	
	96906	114	
	96906	114	
	96906	118	
	96906	119	
	96906	120	1
	96906	124	
	96906	125	4
MS35338-8	96906	7	
	96906	10	1
	96906	11	
	96906	34	
	96906	85	
MS35338-9	96906	5	2
	96906	83	3
	96906	83	4
MS35339-44	96906	62	3
MS35387-1	96906	35	
MS35388-4	96906	101	3
MS35425-28	96906	29	
MS35478-1683	96906	24	1
MS35478-1691	96906	24	
MS35650-102	96906	44	
MS35650-302	96906	41	1
MS35690-1005	96906	22	1
MS35690-2425	96906	131	
	96906	135	1
MS35690-404	96906	47	1
MS35690-405	96906	125	1
MS35690-425	96906	28	
	96906	120	4
	96906	121	
MS35690-502	96906	42	1
	96906	47	2
MS35690-522	96906	33	1
MS35690-525	96906	100	
	96906	114	
	96906	114	1
	96906	120	1
	96906	124	
	96906	125	4

SECTION IV. INDEX-NATIONAL STOCK NUMBER AND REFERENCE NUMBER CROSS-REFERENCE TO FIGURE AND ITEM NUMBER

REFERENCE No.	MFG CODE	FIGURE NO.	ITEM NO.
MS35690-605	96906	4	3
	96906	11	7
	96906	29	15
	96906	29	20
	96906	31	5
	96906	43	11
	96906	49	3
	96906	70	10
	96906	77	13
	96906	78	1
MS35690-7055	96906	83	49
MS35690-825	96906	2	4
	96906	10	28
	96906	11	9
	96906	16	3
	96906	30	19
	96906	89	9
MS35691-1225	96906	76	6
MS35691-5	96906	78	8
MS35691-525	96906	114	9
MS35691-625	96906	5	7
	96906	18	4
	96906	30	1
	96906	30	21
	96906	30	25
	96906	30	33
	96906	31	1
	96906	33	15
	96906	34	4
	96906	38	12
	96906	38	24
	96906	44	20
	96906	101	6
	96906	114	5
	96906	118	32
	96906	119	32
	96906	124	3
MS35691-65	96906	8	13
MS35691-725	96906	78	11
	96906	114	20
MS35691-825	96906	11	2
	96906	15	11
MS35770-9	96906	56	16
MS35842-13	96906	40	2
MS35842-3	96906	10	5
	96906	56	5
	96906	83	26
	96906	99	17
MS39061-1	96906	79	18
MS39230-1	96906	38	15
MS49005-8	96906	102	8
MS49006-14	96906	134	6
MS51095-334	96906	17	69
MS51095-337	96906	17	74
MS51097-115	96906	13	5
MS51097-62	96906	12	3
MS51113-1	96906	79	20
MS51318-1	96906	25	1
MS51373-1	96906	116	4
MS51922-12	96906	102	5
MS51967-13	96906	16	2
	96906	33	17
	96906	43	16
■ MS51967-20	96906	1	4
MS51968-14	96906	101	25
MS51972-7	96906	26	7
■ MS521318-21	96906	298	4
MS75004-2	96906	29	4
MS75058-1	96906	82	9
MS90725-1	96906	82	2
MS90725-107	96906	29	10
	96906	99	5
MS90725-112	96906	63	6
MS90725-113	96906	21	1
	96906	33	21
	96906	66	10
	96906	94	
MS90725-121	96906	10	2

REFERENCE No.	MFG CODE	FIGURE NO.	ITEM NO.
MS90725-121	96906	66	12
MS90725-16	96906	100	17
MS90725-162	96906	113	29
MS90725-165	96906	60	4
MS90725-31	96906	118	4
	96906	119	4
MS90725-32	96906	17	66
	96906	86	12
	96906	86	13
MS90725-33	96906	83	34
MS90725-34	96906	67	12
	96906	67	23
MS90725-35	96906	57	6
MS90725-36	96906	42	14
	96906	47	24
MS90725-40	96906	83	29
MS90725-41	96906	67	19
MS90725-42	96906	66	13
MS90725-43	96906	87	1
MS90725-57	96906	33	4
	96906	45	6
	96906	113	3
MS90725-58	96906	6	9
	96906	7	5
	96906	7	13
	96906	15	31
	96906	24	12
	96906	29	12
	96906	32	4
	96906	34	17
	96906	65	8
	96906	81	14
	96906	90	44
	96906	92	6
MS90725-59	96906	42	17
	96906	65	6
	96906	76	19
	96906	85	2
	96906	113	15
MS90725-6	96906	59	2
MS90725-60	96906	6	5
	96906	31	6
	96906	40	8
	96906	65	2
	96906	99	13
	96906	112	3
MS90725-61	96906	54	11
	96906	55	3
	96906	64	4
	96906	73	3
	96906	113	21
	96906	140	13
MS90725-63	96906	57	9
MS90725-64	96906	15	32
	96906	36	14
	96906	54	7
	96906	76	22
	96906	100	13
	96906	118	11
MS90725-65	96906	30	11
MS90725-66	96906	111	1
MS90725-68	96906	112	1
MS90725-7	96906	125	43
MS90725-70	96906	111	12
MS90725-71	96906	90	23
MS90725-8	96906	46	7
MS90725-84	96906	45	3
MS90725-86	96906	5	24
	96906	43	7
	96906	83	38
	96906	90	47
MS90725-88	96906	104	8
MS90725-9	96906	47	19
	96906	82	8
MS90725-90	96906	83	40
MS90725-96	96906	56	3
MS90726-10	96906	28	1

SECTION IV. INDEX-NATIONAL STOCK NUMBER AND REFERENCE NUMBER CROSS-REFERENCE TO FIGURE AND ITEM NUMBER

REFERENCE No.	MFG CODE	FIGURE NO.	ITEM NO.
S9076-10	96906	121	6
S90726-111	96906	10	31
	96906	16	7
S90726-113	96906	37	2
S90726-114	96906	91	15
S90726-115	96906	5	17
S90725-118	96906	2	8
	96906	107	13
S90726-14	96906	30	17
S90726-156	96906	136	37
S90726-160	96906	101	28
S90726-164	96906	34	12
S90726-168	96906	34	15
	96906	37	7
S90726-169	96906	140	6
S90726-29	96906	95	7
	96906	96	2
	96906	97	4
S90726-33	96906	100	18
S90726-34	96906	33	8
	96906	34	7
	96906	114	18
	96906	120	13
	96906	124	5
	96906	125	46
S90726-39	96906	114	24
	96906	120	19
S90726-42	96906	120	22
S90726-58	96906	124	1
S90726-6	96906	38	6
	96906	79	28
	96906	81	7
S90726-60	96906	6	16
	96906	8	8
	96906	30	4
	96906	30	28
	96906	30	29
	96906	30	30
	96906	31	3
	96906	38	21
	96906	118	29
	96906	119	29
S90726-62	96906	10	35
	96906	33	12
S90726-64	96906	10	11
S90726-65	96906	114	23
S90726-66	96906	31	7
	96906	73	15
	96906	101	4
	96906	101	30
S90726-68	96906	5	6
	96906	101	9
S90726-70	96906	5	16
	96906	98	7
S90726-8	96906	120	38
S90727-111	96906	69	3
S90727-114	96906	137	10
S90727-165	96906	30	12
	96906	77	1
	96906	113	28
S90727-169	96906	136	11
S90727-170	96906	126	18
S90727-171	96906	126	21
S90727-191	96906	98	9
S90727-86	96906	102	11
S90727-74	96906	18	1
S90128-109	96906	102	1
S90728-5	96906	68	13
S90728-70	96906	43	13
	96906	78	2
	96906	94	1
12874	74400	26	1
12876	74400	26	1
13542	74400	79	1
13542-1	74400	79	7
1509	74400	80	1
1672	74400	81	12
2012	34229	29A	

REFERENCE No.	MFG CODE	FIGURE NO.	ITEM NO.
M2361-9-15	92863	10	34
N28-1	78500	137	8
N5000-244	79136	93	17
N7	06229	82	
OR251	73195	116	6
PDA25	82647	79	12
PDA6	73803	79	19
PDLA45	73803	82	7
PD1135M3	13829	22	9
P10-0808	18265	39	2
P10-1238	18265	39	3
P10-3198	18265	39	8
P10-3671	18265	39	1
P10-5168	18265	38	4
P11-2031	18265	39	5
P11-2077	18265	39	7
P17804	18265	39	6
P18464	18265	39	4
RA26561-2	73195	116	5
RBX00-2226	18265	38	1
RV354	79780	115	
RV71016	79780	133	9
R107	78643	78	6
R109	78643	15	29
	78643	101	14
R111	78643	11	1
SERUR34-1	79780	97	14
SFGR5-2	79780	97	9
SR346TU5	73195	116	7
S11026-1	79780	127	17
S266D1	78500	132	36
S268-1	79780	128	6
S269-1	78500	128	6
S2714-1	78500	137	34
S2813-1	78500	132	10
	78500	133	34
TA1687-11	13829	22	15
TC110	75272	82	
TC12	75272	12	16
TC16	75272	120	40
TC171	75272	82	
TS33-440	91265	10	17
U83000-24	13829	22	10
U1207TM	29883	137	22
V110-16M	91561	10	14
WAR34-4	79780	97	15
WAR44-3	78500	97	13
WWN351TYPE1	81348	83	42
W4C8-324-4	96879	140	8
X144-3	79807	22	18
X230208	88142	45	10
X230209	88142	45	8
X30-26	13829	22	3
X73-37-17	13829	22	2
YA1133	13829	22	23
Y1C58	13829	22	12
Y1508-1	13829	22	7
ZA16C3	13829	22	20
001484	16764	81	9
011349-2	92392	10	23
037332-4	92392	1	15
037851-3	92392	1	16
050915-2	92392	29	26
051707-2	92392	140	
052043-1	92392	13	15
074452	92392	79	6
0863003	45681	17	27
0920168	92392	81	11
1A44282A01	94990	58	
1P41123A02	94990	58	4
1P44811A31	94990	58	6
1X1711X1	02892	94	7
10X382	78500	133	16
10X544	78500	137	41
10X545	78500	133	42
10X659	78500	132	26
	78500	136	27
100X65	45681	17	24

SECTION IV. INDEX-NATIONAL STOCK NUMBER AND REFERENCE NUMBER CROSS-REFERENCE TO FIGURE AND ITEM NUMBER

REFERENCE No.	MFG CODE	FIGURE NO.	ITEM NO.
101487	88142	45	17
101488	88142	45	16
101489	73370	45	15
102153	87405	42	7
102593	00000	83	6
103-3502-1331-40	72619	79	8
103X7	45681	17	54
103388	24617	133	39
	24617	137	37
	24617	137	39
103389	24617	133	37
103496	00000	101	18
	00000	114	7
103629	88142	45	14
103896	09367	40	31
10394	84670	52	
104X117A	45681	17	46
104X118A	45681	17	38
104X119A	45681	17	39
104X135A	45681	17	8
104X16A	45681	17	72
104X216A	45681	17	61
104X220A	08752	17	6
104018	73340	45	19
104071	88142	45	18
10408	84760	51	14
104187R1	45681	17	43
104503	88142	42	3
10453	84760	52	8
10464	09367	52	11
105X12L	45681	17	2
105X16L	45681	17	
105X20L	45681	17	32
	45681	17	58
10505	84760	49	8
10516	00000	38	25
10519	84760	52	7
10529	84760	52	3
10541	84760	52	2
105417	00000	83	43
	00000	120	7
105616	00000	38	26
10567	84760	52	14
10574	84760	52	13
10584	84760	52	15
10786	80194	1	2
10EX20	45681	17	33
10815	80194	1	23
109X118T	45681	17	37
109X119T	45681	17	40
109X12T	45681	17	44
109X16T	45681	17	71
109X216T	45681	17	60
109024	88142	42	6
109084	00000	46	10
	00000	59	4
	00000	82	6
	00000	82	11
10920506	19207	24	2
10920548-1	19207	24	1
10920548-2	00000	24	1
10930019	00000	24	5
10998-0204	73680	12	6
11083-8X1-4	30327	130	
1111-6AA	34229	29A	13
1111-16AA	34229	29A	10
1113868	16764	60	5
11141	84760	52	48
1116998	16764	79	15
1119848	16764	61	44
11208	84760	52	21
11212	84760	52	20
112129	00000	68	4
112715	00000	76	29
11304	84760	52	56
11315	84760	52	22
11329	84760	52	22
11332	84760	52	10
11346	84760	52	47

REFERENCE No.	MFG CODE	FIGURE NO.	ITEM NO.
11437	84760	52	19
11438	84760	52	52
114380	00000	100	8
11439	84760	52	18
114627	00000	75	20
114628	00000	75	19
114798	00000	75	18
11507	84760	51	12
	84760	52	36
11508	84760	52	33
11523	77445	108	10
11525	84760	52	25
11532	84760	52	39
11580	09367	50	22
11582	84760	50	7
	84670	52	40
11588	84760	50	42
11604	84760	50	23
11611	84760	50	34
	84760	51	11
11620	84760	52	62
11658	84760	52	61
118831	24617	62	18
11901	84760	50	17
11919	84760	50	18
11966	84760	50	44
11969	84760	50	19
11994	84760	50	46
12X17X1	02892	94	10
1210-6	34229	29A	14
1216-4	34229	29A	11
12008	84760	51	3
12040	84760	50	25
	84760	50	36
	84760	51	9
12054	84760	50	10
12106	84760	50	9
121508	88044	136	10
121709	88142	45	13
12173	84760	50	28
121832	00000	24	7
121841	00000	23	7
121902	00000	38	2
	00000	79	14
	00000	81	4
121932	00000	73	19
12202	84760	50	6
12208	84760	50	39
12210	84760	50	45
12214	84760	50	43
12216	84760	52	53
12221	84760	50	16
122236	00000	15	28
	00000	114	11
12235	84760	50	40
1225P94	79780	126	20
12253	84760	50	15
12259	84760	52	12
1228F136	78500	133	20
12288	84760	50	41
1229A1301	78500	133	19
	78500	137	21
1229E1331	78500	137	36
1229H1022	78500	133	10
1229H216	79780	126	7
1229J1024	78500	133	14
1229J218	78500	126	9
1229L1026	78500	137	15
1229M1027	78500	137	11
1229N221	78500	126	2
	78500	127	5
1229N222	78500	126	8
1229P1030	78500	133	36
1229S1553	79780	133	41
1229Y1299	78500	127	15
12385	84760	44	5
12406	84760	52	31
124553	24617	75	26
12460342	78500	137	17

EFERENCE No.	MFG CODE	FIGURE NO.	ITEM NO.
46FB4	79780	126	10
479	84760	50	13
480	84760	50	12
500263	79780	134	
	79780	138	7
50Z182A	78500	132	17
	79780	136	18
500	84760	50	4
513	84760	50	11
519	84760	50	3
529	84760	50	2
543B	00000	139	1
695	84760	51	2
764	84760	51	7
766	84760	51	16
7951	00000	63	5
90-10S	01276	40	23
972	84760	50	27
999	84760	50	33
X41	78500	133	17
003	84760	50	31
010	84760	50	32
220E6585-2	97403	29A	
220E6588	97403	29B	3
3111	00000	38	27
399	78500	137	38
4566	00000	25	11
521	84760	50	6
	84760	52	41
556	84760	50	38
7346	24617	76	5
807	84760	50	35
	84760	51	10
829	84760	52	45
837	84760	52	42
839	84760	52	44
A40627A04	94990	58	21
A40770A01	94990	58	
A44025B01	94990	58	
S	79470	76	13
X57	78500	133	38
0	79470	77	29
0039	24617	83	12
1240	00000	67	7
1281	73342	104	7
1286	00000	76	12
3407	87405	42	4
3938	73342	113	1
3985	24617	134	9
	24617	138	5
408	84760	50	26
4243	24617	114	8
4513	88142	42	1
482	84760	50	47
483	84760	52	63
5	79470	43	10
5645	24617	97	10
5657	73342	112	31
675	84760	50	37
680	84780	50	20
760	84760	50	1
9060	92392	45	12
E44544A06	94990	58	
044434B05	94990	58	1
044543A10	94990	58	12
X842	78500	133	7
001-2			
0035	88142	42	2
024	84760	50	29
026	84760	50	30
034	84760	52	4
1413	88142	42	8
225	84760	52	30
228	84760	52	35
3684	88142	42	9
4100	88142	42	
479	84760	51	13
619	84760	52	50
627	84760	52	29

REFERENCE No.	MFG CODE	FIGURE NO.	ITEM NO.
15699	84760	52	24
15701	84760	52	34
15724	84760	52	51
	84760	52	54
15739	84760	51	17
15740	84760	51	15
15749	84760	52	9
15750	84760	51	18
15752	84760	51	20
15821	84760	52	38
15830	84760	50	5
15833	84760	52	49
15855	84760	52	60
15869	84760	52	55
15875	84760	52	27
15877	84760	52	37
1682X	02231	83	27
16C64	84760	52	6
1606-9AA	34229	29A	12
1616-27AA	34229	29A	9
16144	84760	52	1
16225	84760	52	46
16440	84760	52	43
16448	84760	52	58
1653-562708	45681	17	25
1653-562709	45681	17	26
1653-562729	45681	17	
1653-562731	08752	17	5
1653-562732	08752	17	3
1653-592282	08752	17	28
1653-592409	08752	17	14
1653-635926	45681	17	4
1653-636333	45681	17	63
1653-636335	45681	17	59
1653-645085	45681	17	42
1653-645214	45681	17	45
1653-645379	45681	17	36
1653-645500	45681	17	68
1653-645556	45681	17	41
1653-645557	45681	17	35
1653-645558	45681	17	50
1653-645559	45681	17	34
1653-645567	45681	17	9
1653-645729	45681	17	52
1653-645730	45681	17	51
1653-646717	45681	17	65
1653-646718	45681	17	64
1653-646719	45686	17	29
1653-646720	45686	17	30
1653-646721	45681	17	31
1653-646722	45681	17	57
1653-655105	45681	17	62
1653-655514	45681	17	22
1553-655666	45681	17	48
1653-655670	45681	17	47
1653-656053	45681	17	70
1653-656543	45681	17	
1653-656545	45681	17	7
1653-656598	45681	17	20
1653-665540	45681	17	13
1653-665943	45681	17	10
1653-666276	45681	17	17
1653-675081	45681	17	73
1653-675227	45681	17	12
1653-675340	45681	17	18
1653-675341	45681	17	15
1653-675342	45681	17	23
1653-675343	45681	17	16
16610	84760	50	21
16846	84760	52	59
17C44555A07	94990	82	13
17X5	45681	17	55
17056	84760	52	28
17086	84760	52	57
171123	24617	15	2
	24617	15	7
	24617	30	6
	24617	34	3
17162	80194	14	14

SECTION IV. INDEX-NATIONAL STOCK NUMBER AND REFERENCE NUMBER CROSS-REFERENCE TO FIGURE AND ITEM NUMBER

REFERENCE No.	MFG CODE	FIGURE NO.	ITEM NO.
172378	00000	32	3
172427	00000	35	2
17310	80201	93	18
17632	84760	51	8
17633	84760	51	1
17634	84760	51	4
17635	84760	51	5
17792	84760	52	16
17793	84760	52	32
17794	84760	51	19
180084	00000	48	15
180191	00000	43	15
18137	84760	52	23
1820H60	78500	132	35
1820J62	79780	136	36
1822	17284	38	11
1825M221	79780	138	8
18278236	79780	126	15
	79780	127	13
1827U229	78500	132	32
1827V230	79780	136	33
1829E707	78500	132	30
1829F708	78500	132	7
1829L194	78500	127	7
1829M715	79780	136	31
1829N196	78500	127	18
1829N716	78500	136	9
1829P198	78500	127	8
1829S877	79780	136	7
1829X856	78500	132	9
1844P536	79780	134	8
	79780	138	9
1845E31	79780	127	3
1845J36	79780	126	3
1846V282	79780	126	11
1846V360	79780	127	9
1854D212	79780	136	29
1854W257	78500	132	28
1854Z286	78500	126	17
1859C107	79780	127	16
1859B83	79780	126	19
1861785	16764	61	10
1861791	24617	61	35
18633	80194	1	3
187375	52788	90	26
187540	53788	90	18
18967	84760	51	6
189882626	78500	132	4
1898626	78500	136	4
1898F760	79780	132	31
1898H762	78500	136	32
190263-12	01276	6	19
1907475	16764	61	14
190877	00000	23	4
1909523	16764	61	19
1909531	16764	61	8
1911644	16764	62	26
1913080	16764	61	18
1914373	16764	62	24
1914640	16764	61	15
1914642	16764	61	38
1914644	16764	61	36
1914647	16764	61	20
	16764	62	33
1914800	16764	61	40
1914842	16764	62	1
1914869	16764	61	32
	16764	62	21
1914E73	16764	62	
1915309	16764	79	
1916272	16764	62	
1916439	16764	61	25
	16764	62	17
1918047	16764	62	30
1918687	16764	61	27
1918690	16764	61	26
1921805	16764	62	29

REFERENCE No.	MFG CODE	FIGURE NO.	ITEM NO.
1922457	16764	62	32
1923484	18764	62	6
1930611	16764	61	43
1934478	16764	62	39
1936466	16764	62	31
1942258	16764	62	16
1943242	16764	62	10
1945356	16764	61	42
	16764	62	
1945468	16764	62	35
1945484	16764	62	37
1945487-1	16764	62	8
1945490	16764	62	12
1945496	16764	62	3
1945500	16764	62	2
1945649	16764	62	37
1946407	16764	61	13
1948515	16764	61	21
1948516	16764	61	16
1948519	16764	61	7
1948520	16764	61	5
1948521	16764	61	4
1948526	16764	61	3
1948529	16764	62	23
1948533	16764	62	11
1948536	16764	62	14
1948537	16764	62	19
1948538	16764	62	25
1949606	16764	62	15
1949608	16764	62	
1949618	16764	61	6
1951069	16764	62	28
1951073	16764	61	23
1953236	16764	61	34
195423-9	92392	99	2
1955990	16764	62	
1961573	16764	62	
1962047	16764	61	39
1962048	16764	61	9
1964294	16764	62	5
1964857	16764	61	41
	16764	62	
1965093	16764	61	37
1965472	16764	62	38
1966651	16764	62	13
1968225	16764	62	9
1996005	16764	81	2
1996041	16764	79	34
2A40631A05	94990	58	23
2A41435A03	94990	57	17
2S119468	94990	58	19
2S136307	94990	58	16
20X1711X13	02892	94	9
20X262	78500	132	15
	78500	136	16
2000-9-953	78500	127	
2000D550	79780	126	
2000L246	92392	115	
2006797-7	92392	117	12
2023-8-10S	01276	40	25
20270Z-6-8S	01276	92	9
202898	06853	85	20
202979	06853	84	4
203052	06853	86	3
203175-5	06853	88	7
204157	80194	1	18
204820	06853	84	6
205000	36251	3	9
2050363-5	92392	117	7
2051708-0	92392	140	
2051854	92392	130	
2062-8-8S	01276	92	4
2081-12-8S	01267	56	13
208866	80194	20	
209199	00000	90	13
209992	80194	1	11
21X1711X1	02892	94	8

SECTION IV. INDEX-NATIONAL STOCK NUMBER AND REFERENCE NUMBER CROSS-REFERENCE TO FIGURE AND ITEM NUMBER

REFERENCE No.	MFG CODE	FIGURE NO.	ITEM NO.
210004	80194	14	18
210039	06853	86	7
210295-125	01276	7	7
210468	06853	84	2
211-02	79780	95	3
2110-2	04716	91	9
211547	80194	4	8
211548	80194	4	4
211549	80194	4	7
212735	06853	86	1
213741	00000	82	1
	00000	119	11
2148584	24617	96	10
2148585	24517	98	8
	24617	95	4
215310	92392	120	33
2155	79150	10	26
	79150	77	28
218487	00000	133	15
	00000	137	16
218512	00000	91	11
2203A2497	79780	133	27
2203B2498	79780	133	27
2203C2499	79780	133	27
2203D2500	79780	133	27
2203E1253	78500	133	22
2203E2501	79780	133	27
2203F2502	79780	133	27
2203G2503	79780	133	27
2203H2504	79780	133	27
2203H450	78500	137	24
2203J2506	79780	133	27
2203J452	78500	137	25
2203K2507	79780	133	27
2203K453	78500	137	23
2203N1054	78500	137	28
2203Q1057	78500	137	28
2203R1058	78500	137	28
2203S1059	78500	137	28
2203T1060	78500	137	28
2203T462	78500	133	23
2203U1061	78500	137	28
2203U463	78500	133	24
2230V1062	78500	137	28
2203V1063	78500	137	28
2203V1064	78500	137	28
2203V1065	78500	137	28
2203Z2496	79780	133	27
220708	00000	73	24
2208E421	97286	133	31
221154	06853	120	9
2214W49	79780	137	1
2233F448	78500	133	13
2233G449	78500	137	14
2234A69	78500	133	11
22348470	78500	137	12
224296	06853	120	37
225514	06853	85	13
22585123	79780	126	6
226316	06853	84	5
227252	06853	85	14
228195	06853	85	16
229299M1	80194	1	19
22970653	78500	133	40
229778	77445	135	9
229848	05853	130	
230527	06853	86	6
232816	06853	86	4
234024	87405	42	5
23438058	78252	10	18
23604-24X	99103	9	2
236118	06853	85	9
236126	06853	85	3
236577	06853	87	3
236705-0	92392	40	4
23703	80194	14	13
23796	80194	14	19

REFERENCE No.	MFG CODE	FIGURE NO.	ITEM NO.
238597	06853	85	19
238598	06853	85	18
238610	06853	85	21
23904	80194	1	6
239395	06853	85	6
239541	06853	85	17
239658-8	06853	88	8
240333-5	06853	88	6
240334-3	06853	88	10
240336-8	06853	88	11
240338-4	06853	88	5
240339-2	06853	88	4
240345-9	06853	88	2
240346-7	06853	88	14
240347-5	06853	88	1
240580	06853	86	9
2455168	73342	115	2
25M221	79780	134	7
255B840	80648	140	10
25001500-375	86927	93	6
255605	06853	85	7
2586-10	04716	91	7
258779	52788	90	36
25984	80194	14	10
26A4429801	94990	58	14
26463	80194	4	6
265079	52788	90	20
266034	52788	90	40
266505	52788	90	28
266506	52788	90	27
266678	52788	90	38
266800	52788	90	29
266903	52788	90	39
266905	52788	90	39
266907	52788	90	39
266909	52788	90	39
267608	52788	90	
269P	30327	46	3
27X638	45681	17	56
270247	52788	90	42
2740Y623	79780	115	
274070	72582	88	13
275201-2	06853	88	9
275202-0	06853	88	3
275230-1	06853	88	12
27939M1	80194	14	15
27940M1	80194	14	15
2808J1024	79780	138	1
2808K1025	79780	138	3
2808S877	78500	132	5
2808Z884	78500	136	5
28121	80194	14	6
2814M65	78500	133	1
28221M1	80194	14	7
28225	80194	14	12
28259	80194	14	9
2847G137	76500	127	11
2847R200	79780	127	5
28562	80194	14	5
2858A27	79780	127	6
2858V282	78500	127	1
29N1516	72962	36	16
29561	80194	1	7
29582	80194	1	20
3840568A12	94990	58	
3841741A09	94990	58	18
3844209B06	94990	58	
39932-5	79780	96	14
3X373	79780	132	2
	79780	136	2
30044557A14	94990	58	
3000	27964	40	5
3001171-2	92392	15	1
	92392	101	1
3001437	92392	6	15
3001482-3	92392	12	18
3001559-8	92392	2	2

SECTION IV. INDEX-NATIONAL STOCK NUMBER AND REFERENCE NUMBER CROSS-REFERENCE TO FIGURE AND ITEM NUMBER

REFERENCE No.	MFG CODE	FIGURE NO.	ITEM NO.
3001559-8	92392	3	7
3001621	92392	92	12
3002196-8	92392	6	10
3003160-3	92392	12	21
3005382-1	92392	99	1
3006439-8	92392	99	16
3006769-8	92392	117	1
3006799-5	92392	117	14
3006806-8	92392	117	13
3006816-7	92392	77	6
3007065-0	92392	15	35
3007115-3	92392	117	15
3008139-2	92392	13	7
3010159-6	92392	10	27
	92392	77	27
3010347-7	92392	3	13
3010603-3	92392	13	6
3011248-6	92392	7	3
	92392	92	8
	92392	100	
3011625-5	92392	3	17
3012488-7	92392	123	12
3013807-7	92392	97	7
3014236-9	92392	78	15
3015837-2	92392	8	7
3016189-7	92392	12	8
3016272-1	92392	12	7
3016399-2	92392	101	10
3016405-7	92392	12	4
3016496-6	92392	46	2
3016601-1	92392	12	5
3017556-6	92392	13	17
	92392	135	7
3018142-4	92392	101	26
3018302-4	92392	78	13
3019231-4	92392	10	21
3019807-1	92392	135	5
3019828-7	92392	13	16
3019839-4	92392	13	12
3019859-2	92392	13	11
3019891-5	92392	13	9
3019937-6	92392	13	8
3020678-3	92392	140	18
3020874-8	92392	15	9
3020955-5	92392	9	7
3021892-9	92392	128	9
3021893-7	92392	129	
3022056-0	92392	96	12
3024079-9	92392	34	18
3025958-4	92392	15	12
3026389-3	92392	37	8
3026405-5	92392	101	16
3028393-1	92392	77	21
3028787-4	92392	122	15
3029291-6	92392	29	6
3029296-5	92392	79	16
3029297-3	92392	79	17
3029930-9	92392	83	35
3031668-1	92392	120	3
3032277-0	92392	10	22
3032335-6	92392	36	8
3032350-5	92392	135	4
3034	93784	123	8
3036228-9	92392	38	13
3036937-5	92392	131	1
3037002-7	92392	83	47
3037049-8	92392	120	14
3038683-3	92392	38	16
3038968-2	89926	116	8
3038846-6	92392	12	
3040	77915	89	1
3040648-2	92392	38	20
3041927-9	92392	140	16
3041936-0	92392	140	2
3042327-1	92392	133	5
3042335-4	92392	135	1
3042509-4	92392	12	19
3042641-5	92392	36	12
3042646-4	92392	30	9
3042688-6	92392	135	6
3042706	92392	92	11
3042742-1	92392	98	1
3042747-0	92392	96	
3042772-6	92392	3	5
3042772-8	92392	3	5
3042796-7	92392	98	3
3042802-3	92392	12	1
3042808-0	92392	98	5
3042816-3	92392	96	6
3042830-1	92392	44	11
3042836-1	92392	122	2
3042836-7	92392	122	13
3042839-5	92392	122	1
3042894-0	92392	113	25
3042895-7	92392	140	5
3042896-5	92392	140	4
3042898-1	92392	140	3
3042935-1	92392	140	19
3042937-7	92392	140	15
3042939-3	92392	140	11
3042941-9	92392	140	9
3042994-8	92392	140	7
3042082-1	92392	36	2
3043197-7	92392	122	3
3043222-3	92392	89	6
3043391-6	92392	78	9
3043474-0	92392	30	20
3043475-7	92392	30	20
3043646-3	92392	56	11
3043676-0	92392	15	13
3043828-7	92392	138	2
3043841-0	92392	29	16
	92392	32	2
3043878-2	93292	37	4
3043879-0	92392	37	3
3044015-0	92392	82	
3044021-8	92392	93	11
3044055-6	92392	92	5
3044112-5	92392	5	11
3044134-9	92392	5	8
3044154-7	92392	5	10
3044155-4	92392	5	9
3044159-6	92392	122	14
3044170-3	92392	6	3
3044236-2	92392	31	4
3044364-2	92392	99	14
3044404-6	92392	107	3
3044440060	92392	105	4
3044737	92392	17	1
3044842-7	92392	10	13
3044869-0	92392	2	1
3044877-3	92392	37	6
3044878-1	92392	37	6
3044879-9	92392	30	24
3044937-5	92392	77	23
3044963-1	92392	3	14
3045042-3	92392	3	8
	92392	3	22
3045049-8	92392	12	23
	92392	13	2
3045055-5	92392	3	10
3045059-5	92392	3	20
3045069-6	92392	13	4
3045107-4	92392	3	19
3045234-6	92392	31	10
3045248-6	92392	101	22
3045324-5	92392	10	36
2045463	92392	13	19
3045472-2	92392	2	6
3045496-1	92392	13	14
3045784-0	92392	10	33
3045837-6	92392	9	8
3045843-4	92392	38	10
3045855-8	92392	10	8

SECTION IV. INDEX-NATIONAL STOCK NUMBER AND REFERENCE NUMBER CROSS-REFERENCE TO FIGURE AND ITEM NUMBER

REFERENCE No.	MFG CODE	FIGURE NO.	ITEM NO.
3045858-2	92392	30	5
3045859-0	92392	10	4
3045864-0	92392	16	5
3045873-1	92392	10	20
3045887-1	92392	10	19
3045896-2	92392	78	12
3045906-9	92392	122	8
3045907-7	92392	122	5
3045908-5	92392	122	6
3045983	92392	33	16
3045983-8	92392	33	9
3045984	92392	33	19
3045984-6	92392	33	22
3047506-5	92392	124	8
3047507-3	92392	125	
3047529-7	92392	100	5
3047952-1	92392	31	9
3047955-4	92392	93	10
3047958-8	92392	38	12
3047968	92392	93	5
3047987-7	92392	93	15
3048256-6	92392	114	16
3048332-6	92392	78	5
3048404-2	92392	138	11
3048511-5	92392	120	20
3048541-1	92392	44	8
3048619-5	92392	79	32
3048684-9	92392	13	10
3048711-0	92392	79	11
3048713	92392	79	21
3048776-3	78500	137	7
3048777-1	78500	137	5
3048831-6	92392	13	
3048860-5	92392	101	21
3048960-3	51588	101	
3048964-5	92392	89	4
3048968-6	92392	89	2
3050A	93784	123	1
3050040-9	92392	3	12
3050139-9	92392	3	3
3050140-7	92392	3	2
3050141-5	92392	3	4
3050142-3	92392	3	1
3050171-2	92392	12	11
3050174-6	92392	3	21
3050180-3	92392	99	3
3050228-0	92392	78	
3050286-8	92392	120	11
3050295-9	92392	120	41
3050318-9	92392	114	19
3050319-7	92392	101	13
3050321-3	92392	81	6
3050333-8	92392	38	18
3050345-2	92392	81	3
3050351-0	92392	114	13
3050352-8	92392	38	8
3050353-6	92392	93	9
3050354-4	92392	120	32
3050355-1	92392	120	25
3050356-9	92392	120	21
3050357-7	92392	120	13
3050362-7	92392	117	5
3050370-0	92392	101	12
3050367-7	92392	122	9
3050377-5	92392	122	10
3050378-3	92392	122	12
3050379-1	92392	117	9
3050380-9	92392	117	4
3050390-8	92392	101	8
3050399-9	92392	124	4
3050400-5	92392	101	15
3050402	92392	34	8
3050403	92392	34	2
3050404-7	92392	6	1
3050420-3	92392	78	7
3050421-1	92392	6	4
3050433-6	92392	114	10

REFERENCE No.	MFG CODE	FIGURE NO.	ITEM NO.
3050434-4	92392	6	11
3050435-1	92392	9	5
3050441-9	92392	6	12
3050599-8	92392	94	14
3050752-9	92392	93	
3050769-3	92392	101	19
3050771	92392	101	17
3050805-5	92392	7	12
3050806-3	92392	7	28
3050808-9	92392	5	15
3050810-5	92392	7	9
3050811-3	92392	7	23
3050812-1	92392	7	11
3050813-9	92392	7	6
3050814-7	92392	122	4
3050815	92392	122	
3050816-2	92392	91	13
3050817-8	92392	5	19
3050818-8	92392	7	15
3050819-6	92392	7	17
3050820-4	92392	7	26
3050821-2	92392	7	2
3050822-0	92392	7	19
3050823-8	92392	7	20
3050824-6	92392	7	21
3050825-3	92392	7	22
3050833-7	92392	10	7
3050836-0	92392	10	25
3050840-2	92392	7	25
3050841-0	92392	5	12
3050842-8	92392	5	13
	92392	5	14
3050843-6	92392	7	24
3050844-4	92392	8	9
3050845-1	92392	5	21
3050846-9	92392	5	21
3050847-7	92392	5	20
3050848-5	92392	5	20
3050849-3	92392	5	1
3050851-9	92392	92	1
3050852-7	92392	99	6
3050853-5	92392	99	8
3050854-3	92392	6	17
3050855-0	92392	8	6
3050856-8	92392	92	3
3050857-8	92392	8	10
3050859-2	92392	99	9
3050865-9	92392	13	1
3050869-1	92392	13	18
3050870-9	92392	13	18
3050871-7	92392	13	
3050872-5	92392	13	
3050873-3	92392	13	3
3050875-8	92392	12	22
3050876-6	92392	12	22
3050877-4	92392	12	
3050878-2	92392	12	
3050881-6	92392	93	19
3050882-4	92392	92	13
3050893-1	92392	131	4
3050894-9	92392	135	13
3050914-5	92392	29	19
3050916-0	92392	29	24
3050917-8	92392	29	7
3050918-8	92392	29	5
3050923-6	92392	29	13
3050928-5	54681	16	9
3050973-1	92392	120	39
3050974-9	92392	81	16
3050979-8	92392	77	11
3050983-0	92392	77	16
3050988-9	92392	140	1
3050993-9	92392	3	11
3050997-0	92392	29	11
3051	93784	123	7

SECTION IV. INDEX-NATIONAL STOCK NUMBER AND REFERENCE NUMBER CROSS-REFERENCE TO FIGURE AND ITEM NUMBER

FERENCE No.	MFG CODE	FIGURE NO.	ITEM NO.
3051023-4	92392	30	8
3051025-9	92392	83	25
	92392	121	1
3051030-9	92392	121	7
1032-5	92392	44	2
1036-6	92392	30	7
1037-4	92392	30	7
051039-0	92392	44	19
	92392	77	25
3051047-3	92392	15	26
3051048-1	92392	15	41
3051049-5	92392	15	23
3051051-5	92392	15	24
3051052-3	92392	15	27
3051053-1	92392	15	40
3051067-1	92392	34	1
3051070-5	92392	26	5
3051079-8	92392	30	15
3051082-0	92392	15	20
3051083-8	92392	15	22
3051068-7	92392	15	30
3051094-5	92392	77	15
3051096-0	92392	15	5
3051103-4	92392	77	14
3051105-9	92392	77	8
3051118-2	92392	12	24
3051174-5	92392	12	10
3051182-8	92392	140	
3051183-6	92392	8	2
3051184-4	92392	6	18
3051185-1	92392	8	11
3051186-9	92392	6	20
3051702-3	92392	32	1
3051710-6	92392	140	
3051711-4	92392	140	
3051713-0	92392	140	
3051714-8	92392	140	
3051715-5	92392	140	
3051719-7	92392	120	1
3051721-3	92392	140	
051725-4	92392	101	2
51731-2	92392	116	2
51732-0-305172	92392	116	1
051743-7	92392	140	
3051750-2	92392	101	7
3051759-3	92392	101	3
3051763-5	92392	135	2
3051778-3	92392	38	5
3051793-2	92392	78	3
3051826-0	92392	91	
3051843-5	92392	138	4
3051848-4	92392	134	
3051858-2	92392	77	17
3051869-0	92392	77	20
3051890-6	78500	137	18
3051898-9	92392	15	21
3051900-3	92392	15	16
3051938-3	92392	53	1
3051942-5	92392	15	34
3051943-3	92392	15	25
3051944-1	92392	15	15
3051945-8	92392	15	8
3051957-3	92392	140	
3051964-9	92392	15	36
3051966-4	92392	15	6
3051967-2	92392	140	
3051969-8	92392	140	
3051980-5	92392	15	33
3052	93784	123	6
3052004-3	92392	140	
3052005-0	92392	15	39
3052011-8	92392	140	
3052012-6	92392	140	
3052024-1	92392	30	31
3052026-4	92392	82	
3052027-4	92392	42	20
3052028-2	92392	44	18

REFERENCE No.	MFG CODE	FIGURE NO.	ITEM NO.
3052029-0	92392	77	5
3052035-7	92392	42	21
3052036-5	92392	42	23
3052037-3	92392	42	15
3052041-5	92392	82	
3052042-3	92392	82	
3052046-4	92392	117	2
3052076-1	92392	82	
3052077-9	92392	82	
3052078-7	92392	82	
3052079-5	92392	82	
3052085-2	92392	30	34
3052090-2	92392	28	
3052091-0	92392	46	4
3052093-6	92392	82	
3052094-4	92392	82	4
3052100-9	92392	140	
3052103-3	92392	82	3
3052108-2	92392	140	
3052109-0	92392	140	
3052110-8	92392	82	
3052114-0	92392	140	
3052115-7	92392	140	
3052124-9	92392	140	
3052127-2	92392	82	
3052128-0	92392	140	
3052129-8	92392	140	
3052132-2	92392	30	16
3052133-0	92392	30	16
3052143-9	92392	140	
3052144-7	92392	140	
3052149-6	92392	82	
3052160-3	92392	60	1
	92392	82	
3052167-8	92392	82	
3052169-4	92392	29	8
3052172-8	92392	2	7
3052173-6	92392	140	
3052177-7	92392	79	22
3052298-1	92392	82	
3052306-2	92392	82	
3052309-6	92392	82	
3052323-7	92392	34	16
3052400-3	92392	93	1
3052403-8	92392	93	7
3052404-5	79136	93	8
3052477-1	92392	93	3
3052485-4	92392	36	1
3052487-0	92392	36	13
3052500-0	92392	34	9
3052530-7	92392	7	
3052867-3	92392	40	6
3053A	93784	123	2
3053222-0	92392	79	25
3053227-1	92392	83	46
	92392	121	2
3053228-7	92392	83	45
3053252-7	92392	100	
3053761-7	92392	105	5
3053765-8	92392	22	5
3054135-3	92392	77	19
3057688-8	92392	24	2
3058	93784	123	3
31102	70960	96	9
3133	04716	91	5
32844556801	94990	58	
3208	43334	103	1
3211	43334	103	4
322B236	79780	132	16
322F214	79780	136	17
32254	23382	77	3
32276	30327	44	14
32279	30327	44	15
3278082	78500	137	13
3278F84	78500	133	12
33086418	78500	137	31
33281	60038	137	3

REFERENCE No.	MFG CODE	FIGURE NO.	ITEM NO.
33316-13	81321	100	11
33472	60038	137	2
34288	57733	79	31
34428	81321	100	9
3460S137	57733	79	29
3460T101	57733	79	24
36F	66295	9	6
	66295	36	3
	66295	56	12
	66295	77	24
36X8	45681	17	67
360FK	57733	79	30
37X20	45681	17	53
3801W1323	79780	134	3
3802P1436	79780	132	20
3802M1443	79780	136	21
3819C315	78500	132	27
3819J322	79780	136	28
3855B236	79780	132	3
3855Y2C7	79780	136	3
3880Q953	79780	136	6
3880W933	78500	132	6
3891L974	78500	136	30
3891M975	78500	136	8
3892C1589	78500	135	34
3892F1540	78500	132	33
3892G1541	78500	132	29
3892H1542	78500	132	8
3897A1327	78500	132	34
3897P1602	79780	136	19
3897R1578	79780	132	18
3897S1527	78500	132	12
3897U1425	78500	136	13
39C443558D2	94990	58	13
3905A53	79780	132	21
3905E283X	79780	136	22
4AA0569A01	94990	58	8
	94990	58	20
4AA0771A01	94990	58	17
4AA1436A03	94990	57	16
40TXS	45681	38	7
4S136282	94990	58	15
4S136290	94490	58	
4X1050	78500	138	10
4X15051	79780	134	5
4X1444	79780	134	
4X1445	79780	134	4
40E	30327	77	26
4000S35	76667	40	15
40005	80194	14	4
40025	80194	14	2
4004	01943	10	10
4020102-2	92392	74	5
4020682-3	92392	70	22
4020879-5	92392	68	2
4021227-6	92392	48	2
4021454-6	92392	75	15
4025006-0	92392	72	7
4025007-8	92392	72	15
4025008-6	09367	72	8
4025009-4	92392	72	14
4025010-2	92392	72	9
4025011-0	92392	72	10
4025015-1	92392	71	3
4025021-9	92392	76	23
4025025-0	92392	76	14
4025030-0	92392	71	8
4025031-8	92392	71	12
4025041-7	92392	72	4
4025050-8	92392	64	2
4025058-1	92392	53	3
4025062-3	92392	76	26
4025064-9	92392	55	2
4025067-2	92392	55	8
4025068-0	92392	55	1
4025070-6	92392	71	11
4025072-2	92392	73	14

REFERENCE No.	MFG CODE	FIGURE NO.	ITEM NO.
4025074-8	92392	73	7
4025077-1	92392	73	1
4025079-7	92392	73	23
4025082-1	92392	74	3
4025097-9	92392	68	1
4025106-8	92392	54	4
4025115-9	92392	72	2
4025120-9	92392	42	19
4025139-9	92392	54	2
4025146-4	92392	48	11
4025147-2	92392	48	8
4025148-0	92392	48	7
4025149-8	92392	48	9
4025164-7	92392	70	27
4025165-4	92392	63	7
	92392	70	28
4025166-2	92392	70	26
4025173-8	92392	75	7
4025175-3	92392	75	9
4025176-1	92392	75	21
4025177-9	92392	70	9
4025179-5	92392	70	18
4025182-9	92392	70	19
4025185-2	92392	70	20
4025186-0	92392	70	21
4025187-8	92392	75	8
4025188-6	92392	75	4
4025189-4	92392	75	1
4025191-0	92392	75	6
4025192-8	92392	75	22
4025193-6	92392	75	24
4025194-4	92392	75	23
4025217-3	92392	47	16
4025218-1	92392	47	15
4025219-9	92392	47	1
4025237-1	92392	75	10
4025238-9	92392	76	28
4025242-1	92392	70	23
4025245-4	92392	76	24
4025246-2	92392	76	25
4025247-0	92392	76	27
4025249-6	92392	49	7
4025298-3	92392	71	1
4025299-1	92392	71	1
4025300-7	92392	71	1
4025301-5	92392	71	1
4025303-1	92392	49	10
4025323-9	92392	76	
4025343-7	92392	73	12
4025388-4	92392	43	1
4025376-7	92392	40	26
4025385-8	92392	48	13
4025392-4	92392	76	31
4025397-3	92392	71	
4025427-8	92392	68	11
4025429-4	92392	60	2
4025433-6	92392	43	18
4025461-7	92392	74	2
4025471-6	92392	76	7
4025478-1	92392	72	12
4025491-4	92392	70	2
4025507-7	92392	83	19
4025528-5	92392	55	9
4025555-6	92392	70	3
4025589-5	92392	72	3
4025619-0	92392	53	2
4025621-6	92392	70	8
4025622-4	92392	83	41
4025624-0	92392	68	5
4025632-3	92392	43	19
4025634-9	92392	83	15
4025641-4	92392	53	4
4025652-1	92392	83	3
4025653-9	92392	83	5
4025710-7	92392	55	7
4025717-2	92392	76	20
4025719-8	92392	63	4

SECTION IV. INDEX-NATIONAL STOCK NUMBER AND REFERENCE NUMBER CROSS-REFERENCE TO FIGURE AND ITEM NUMBER

REFERENCE No.	MFG CODE	FIGURE NO.	ITEM NO.
4025720-6	92392	63	1
4025765-1	92392	69	1
4025781-8	92392	40	18
4025914-5	92392	70	14
4025921-0	92392	55	
4025927-7	92392	40	1
4025979-8	92392	83	39
4025992-1	92392	70	13
4025993-9	92392	70	7
4026004-4	92392	49	6
4026031-7	92392	57	7
4026039-0	92392	74	4
4026091-1	92392	55	5
4026116-6	92392	47	12
4026191-9	92392	40	22
4026224-8	92392	40	3
4026228-9	92392	70	29
4026352-7	92392	71	10
4026353-5	92392	71	9
4026360-0	92392	43	20
4026361-8	92392	43	9
4026362-6	92392	43	22
4026364-2	92392	75	14
4026365-9	92392	75	17
4026382-4	92392	42	18
	92392	76	17
4026460-8	92392	73	9
4026479-8	92392	47	14
4026480-6	92392	73	13
4026483-0	92392	73	10
4026497-0	09367	71	4
4026505-0	09367	71	7
4026533-2	92392	47	13
4026534-0	92392	47	10
4026535-7	92392	47	9
4026536-5	92392	47	8
4026537-3	92392	47	7
4026538-1	92392	47	6
4026548-0	92392	73	2
4026549-8	92392	73	22
4026566-2	92392	40	11
4026578-7	92392	71	
	92392	71	2
4026582-9	92392	73	6
4026587-8	92392	66	1
4026592-8	92392	76	15
4026596-9	92392	67	10
4026600-9	92392	65	5
4026602-5	92392	65	1
4026603-3	92392	66	9
	92392	67	20
4026605-8	92392	67	1
4026606-6	92392	67	21
4026611-6	92392	67	3
4026612-4	92392	67	
4026613-2	92392	67	
4026615-7	92392	67	8
4026616-5	92392	67	5
4026618-1	92392	67	4
4026654-6	92392	48	10
4026699-1	92392	75	25
4026849-2	92392	76	16
4026886-4	92392	54	13
4026887-2	92392	55	6
4026911-0	92392	40	32
4026930-0	92392	66	7
4026934-2	92392	66	14
4026935-9	92392	67	6
4026937-5	92392	67	9
4026938-3	92392	67	
4026941-7	92392	67	13
4026942-5	92392	67	
4026943-3	92392	76	1
4026971-4	92392	67	22
4026981-3	09367	71	5
4026993-8	92392	66	5
4027021-7	92392	56	1

REFERENCE No.	MFG CODE	FIGURE NO.	ITEM NO.
4027023-3	92392	56	8
4027027-4	92392	56	6
4027197-5	92392	83	28
4027233-8	92392	83	50
4027238-9	94990	57	15
4027245-2	92392	83	4
4027247-8	92392	54	5
4027273-4	92392	45	5
4027280-9	09367	68	6
4027282-5	92392	69	
4027283-3	92392	42	
4027303-9	92392	73	8
4027320-3	92392	65	7
4027327-8	92392	57	4
4027416-9	92392	73	21
4027599-2	92392	48	
4027601-6	09367	37	1
4027883-0	92392	48	1
4040305-7	92392	83	36
4040340-4	92392	85	22
4040351-1	92392	83	1
4040515-1	92392	86	2
4040522-7	92392	84	3
4040523-5	92392	84	1
4048596-3	92392	49	5
4049256-3	92392	84	8
4049261-3	92392	85	15
4049264-7	92392	84	7
4051381-4	92392	52	17
4053195-6	92392	85	1
4053235-0	92392	85	12
4054297-9	92392	41	15
4054300-1	92392	41	14
4054302-7	92392	41	19
4054312-6	92392	41	8
4054313-4	92392	41	8
4054317-5	92392	41	4
4054318-8	92392	41	3
4054321-7	92392	41	2
4054439-7	92392	85	8
4055442-0	92392	50	24
4055640-9	92392	41	20
4056129-2	92392	86	10
4056130-0	92392	86	8
4056626-7	92392	86	5
4056668-9	92392	41	17
4056670-5	92392	41	9
4056671-3	92392	41	6
4056673-9	92392	41	18
4056674-7	92392	41	13
4056677-0	92392	41	1
4058884-0	92392	41	12
4058898-0	92392	85	10
4059045-7	92392	41	21
4059211-5	92392	50	
4059278-4	92392	41	11
4059279-2	92392	41	7
4059281-8	92392	41	5
4059418-6	92392	41	10
4059656-1	92392	50	14
4059708-0	92392	83	23
4059709-8	92392	83	22
4059921-9	94990	58	
41X21	45681	17	49
414X173	02892	19	11
4153776-2	92392	70	1
42A40908A03	94990	58	11
42A44373AAC3	94990	58	3
42015120205	00000	139	12
422K63	02892	19	12
4251746-6	92392	72	11
4253819-9	96906	55	10
4253977-5	92392	70	5
4254452-8	92392	76	32
4254608-5	92392	71	6
4254816-4	92392	54	3
4254864-4	92392	67	2

SECTION IV. INDEX-NATIONAL STOCK NUMBER AND REFERENCE NUMBER CROSS-REFERENCE TO FIGURE AND ITEM NUMBER

FERENCE No.	MFG CODE	FIGURE NO.	ITEM NO.
	92392	75	16
4873-5	92392	73	
4905-5	92392	73	17
5055-8	92392	66	3
	92392	66	8
5103-6	92392	67	
5107-7	92392	70	31
5286-9	92392	83	11
5490-7	92392	76	30
5491-5	92392	76	
5612-6	92392	40	21
5661-3	92392	49	9
7247-8	92392	56	10
44663B01	194990	57	13
44933A01	94990	58	10
40562A03	94990	58	5
44138AC3	94990	58	2
15	29944	29B	1
7554-6	92392	56	17
8801-7	92392	40	12
3799-5	92392	70	24
0235-0	92392	69	2
4395-8	92392	43	21
4449-3	92392	76	21
4571-4	92392	67	16
4572-2	92392	67	14
4836-1	92392	30	35
5497-6	92392	70	25
9033-7	92392	48	4
3871-0	92392	99	1
0652-0	92392	48	6
9823-8	92392	87	4
998	00000	40	14
171	00000	120	28
592	73342	113	22
612	24617	112	26
	73342	113	2
514	00000	45	11
519	00000	68	10
	00000	72	13
	24617	40	27
555	24617	132	1
	24617	136	1
572	73342	113	7
587	00000	113	19
597	00000	84	9
	00000	85	4
703	00000	41	22
	00000	54	6
	00000	56	4
	00000	76	2
710	00000	70	30
715	24617	76	3
854	00000	64	3
	00000	76	4
	00000	96	7
751	24617	56	14
	24617	76	11
2163	02892	19	10
0231-8	92392	76	8
9300-1	92392	68	3
149-1	92392	47	4
2-3	30327	44	13
409-6	92392	47	5
084-4	92392	55	
359-0	92392	47	21
374-9	92392	76	9
415-0	92392	47	20
673-4	92392	76	10
836-2	92392	76	
213-3	92392	48	5
243-0	92392	48	3
206-5	92392	75	5
85	16764	61	30
87	16764	62	34
	24617	61	29
99	16764	61	33
18	16764	79	

REFERENCE No.	MFG CODE	FIGURE NO.	ITEM NO.
453435	16764	61	12
453894	16764	61	31
453896	52788	90	1
454X103	02892	19	4
4578	92392	26	4
46134	80194	1	22
4650229-0	92392	70	6
47W14X1-8	30327	122	11
4716090-8	92392	83	14
48044293B15	94990	58	7
48044293B16	94990	58	9
48044532A11	94990	58	22
48X4A	79470	83	44
48120	60038	136	39
48190	60038	136	38
4880	90940	26	4
49044649B03	94990	57	14
49X5A5X4	79470	44	3
49221-1	30327	44	12
493	60038	133	2
	60038	136	26
495	60038	133	3
497	60038	136	25
5NYSM28-98	79780	95	1
5N81	79780	95	9
5N9	79780	95	8
5X504	79780	136	20
5X583	79780	126	14
5X588	79780	127	14
5X589	78500	136	14
5X594	78500	132	13
5ONL528-22	79780	95	5
5000-275	79136	97	12
5008-93	79136	19	20
501680	80194	14	
501681	80194	14	
503322	00000	5	18
503520	00000	139	5
510145	80201	94	11
513X17	02892	19	22
513X42	02892	19	5
5133	74400	26	3
514X885	02892	19	17
514X886	02892	19	1
5141	76894	120	47
519X8	02892	19	18
519X9	02892	19	3
51902	80194	1	5
520904	00000	116	3
521IW	43334	103	12
5214978	00000	129	2
5214979	00000	129	3
5214980	00000	129	5
52400	78500	132	24
52618	78500	132	25
5294507	00000	25	9
5315X12	79470	99	21
537801	00000	132	14
537803	00000	136	15
55A41437A01	94990	58	24
551760	60038	137	30
551870	60038	137	26
55443	60038	137	27
560X185	02892	19	21
560X194	02892	19	8
560565	00000	105	2
5662967	52788	90	33
5663818	52788	90	7
5663828	52788	90	11
5663834	52788	90	6
5665704	52788	90	5
5665836	52788	90	4
5672852	52788	90	37
5672855	52788	90	34
5680283	52788	90	12
5681216	52788	90	13
5681242	52788	90	14

CODE	NO.	NO.
52788	90	16
52788	90	3
52788	90	32
52788	90	8
52788	90	10
52788	90	9
52788	90	19
52788	90	15
52788	91	1
52788	90	22
52788	90	30
52788	90	2
19207	27	1
79780	95	
80194	1	9
80194	1	4
80194	1	
80194	14	11
79470	99	7
00000	139	13
00000	72	1
08108	79	9
79780	97	11
79780	96	13
70960	96	4
70960	97	6
70960	96	3
70960	97	5
30327	83	20
79470	75	12
53477	116	
52788	90	
80194	1	8
74400	26	2
30327	83	16
92867	114	1
80194	20	5
91561	10	16
92392	38	9
04716	91	8
04716	91	4
4716	91	6
30327	44	16
91561	10	15
80194	14	8
00000	135	3
90940	29	3
81321	100	15
91321	100	10
80194	4	2
80648	98	6
92392	11	3
78500	133	25
92392	11	4
60038	133	26
81321	100	12
81321	10	32
81321	100	16
81321	100	6
24617	112	7
73342	103	17
73342	113	
06853	120	44
73342	106	3
73342	107	4
73342	113	12
73342	112	22
73342	102	7
73342	110	5
73342	107	20
73342	108	3
73342	107	5
73342	103	9
73342	107	21
45681	17	21
73342	107	22
73342	107	17

No.	CODE	NO.	NO.
6757164	73342	108	1
6757447	73342	104	19
675804	73342	106	5
6758306	73342	112	25
6758337	73342	113	13
6758503	73342	112	19
6759504	73342	107	9
	73342	108	5
	73342	109	10
6765238	73342	104	4
6769590	73342	111	5
6770253	73342	112	29
6770432	73342	113	
6771273	73342	113	
6771913	73342	112	24
6771914	73342	112	21
6772050	73342	112	27
	73342	113	
6772740	73342	112	23
	73342	113	
6773201	73342	106	7
6773457	73342	110	2
6773460	73342	113	24
6773461	73342	107	14
6773466	73342	110	4
6773467	73342	107	2
6773470	73342	109	4
6773477	73342	113	16
6773478	73342	110	8
6773479	73342	108	8
6773482	73342	108	2
6773483	73342	104	15
6773486	73342	103	7
6773487	73342	104	3
6773488	73342	104	14
6773490	73342	103	13
6773491	73342	103	14
6773492	73342	102	10
6773494	73342	104	23
6773543	73342	111	8
	73342	113	
6773550	73342	115	
6773551	73342	104	20
6773570	73342	113	9
6773592	73342	112	12
6773602	73342	112	13
6773604	73342	106	4
6773607	73342	112	17
6773616	73342	112	18
6773618	73342	112	6
6773622	73342	112	11
6773689	73342	104	22
6774007	73342	102	3
6774008	73342	102	6
6774012	73342	102	2
6774048	73342	104	6
6774155	73342	112	30
6774262	73342	112	20
6774342	73342	113	
66774572	73342	110	9
6774672	73342	105	8
6774680	73342	105	6
6774714	73342	109	6
6775437	73342	109	5
6775541	73342	108	4
	73342	109	9
6775645	73342	112	16
6776396	73342	113	17
6776425	73342	111	7
6776427	73342	111	10
6776429	73342	111	6
6776508	73342	103	3
6776727	73342	103	11
6776749	73342	113	
6776960	73342	111	4
6776965	73342	104	1
6776995	73342	108	12

CROSS-REFERENCE TO FIGURE AND ITEM NUMBER

ERENCE No.	MFG CODE	FIGURE NO.	ITEM NO.
	73342	109	3
998	73342	108	7
	73342	109	2
999	73342	107	18
057	73342	113	
173	73342	113	8
262	73342	109	8
263	73342	109	7
316	73342	111	3
318	73342	113	23
320	73342	113	4
322	73342	113	5
323	73342	113	6
354	73342	111	9
355	73342	113	10
415	73342	102	4
452	73342	109	1
453	73342	108	11
485	73342	109	11
501	73342	105	7
505	73342	113	18
509	73342	110	7
515	73342	102	
575	73342	103	8
576	73342	103	15
577	73342	103	16
578	73342	103	2
591	73342	107	10
592	73342	107	8
842	73342	106	1
189	73342	115	1
190	73342	115	3
191	73342	115	6
194	73342	115	5
498	73342	107	7
799	73342	105	3
1-4X1-8	30327	83	17
808	73680	12	2
176	73680	98	4
	79470	75	13
A	79470	120	2
	79470	120	36
A	79470	120	30
A8X8	79470	83	32
3	79470	81	13
	79470	83	24
014	73342	103	10
363	73342	112	14
365	73342	112	15
433	73342	108	6
726	73342	107	15
727	73342	107	16
730	73342	107	19
181	73342	104	5
185	73342	112	9
187	73342	112	8
168	73342	112	28
205	73342	104	2
228	73342	112	5
382	73342	112	4
811	73342	103	5
814	73342	104	17
803	73342	102	9
536	73342	104	
176	73342	104	21
2	78500	132	37
2	78500	132	38
089	73342	110	3
162	73342	110	11
	30327	83	31
1-4X1-8	30327	49	1
	30327	83	18
3-8X1-8	30327	40	10
	79470	121	3
A	79470	120	34
	79470	117	8
	79470	120	10
	79470	120	12
	79470	120	24
	79470	120	26
X15	02892	94	13
4810B01	80211	82	12
11	34229	29A	1
4632B01	94990	59	1
3	79470	79	10
4	79470	117	3
11	34229	29A	2

REFERENCE No.	MFG CODE	FIGURE NO.	ITEM NO.
702W12	34229	29A	3
702W13LH	34229	29A	4
702N13RH	34229	29A	4
702W14LH	34229	29A	5
702W14RH	34229	29A	5
702W15	34229	29A	15
70417	80194	20	1
70418	80194	20	2
7044	64104	10	6
7044253	00000	139	4
7049602	00000	139	8
7049603	00000	139	7
70916	70434	7	18
70925041	92392	15	10
71703	80254	40	20
72225	78500	133	30
72487	60038	133	29
73007198	92392	36	5
73022067	90940	132	22
73050972	25424	120	35
73059575	92392	36	4
73059713	90940	136	23
7320658	00000	23	3
	00000	24	3
7320711	00000	25	12
737635	19207	90	41
74025101	92392	56	9
74025106	92392	54	4
74025150	92392	48	12
74025472	92392	70	4
74026579	92392	64	1
74027013	92392	70	17
74027014	92392	63	2
74027024	92392	56	15
74027598	92392	70	16
74028795	92392	63	3
74029502	92392	68	6
74029503	92392	68	
74029503	92392	68	
74029399	92392	68	
74029556	92392	68	7
74513701	92392	40	17
7525940	00000	25	2
7525997	00000	24	6
	19207	23	8
7526018	00000	23	2
765	90218	28	2
7708225	00000	104	12
7710550	19207	112	10
7714881	00000	139	9
7716634	19207	82	
7716884	19207	82	
7722323	00000	82	
	19207	82	
7722333	00000	82	
7723308	00000	82	
7723309	00000	82	
7760103	00000	139	
7760104	00000	139	3
7767247	19207	44	10
7771274-1	00000	81	1
780V65	34229	29A	16
780V72	34229	29A	17
780V79	34229	29B	2
7803095	52788	90	17
7803097	52788	90	25
7804252	52788	90	
78067	80194	7	10
7874	80194	20	10
788X18-3	34229	29A	7
788X18-4	34229	29A	6
788X18-5	34229	29A	8
79225	80194	20	7
79226	80194	20	4
79227	80194	20	3
79228	80194	20	8
79229	80194	20	9
8X17X4	02892	94	4
800066	16764	62	7
8017004	19207	119	
80476	80194	1	12
80991	80194	20	6
826468	16764	61	22
830X536	02892	19	15

SECTION IV. INDEX-NATIONAL STOCK NUMBER AND REFERENCE NUMBER CROSS-REFERENCE TO FIGURE AND ITEM NUMBER

CE	MFG CODE	FIGURE NO.	ITEM NO.	REFERENCE No.	MFG CODE	FIGURE NO.	ITEM NO.
	00000	25	4		92392	104	9
	00000	25	5	904208-8	92392	29	9
	00000	113	11		92392	43	4
	00000	23	5	904267	92392	8	4
	00000	23	1	905599	73342	104	16
	73342	104	25	905645-4	92392	72	5
	73342	104	27		92392	72	6
	00000	139	11	906725	24617	104	13
	19207	82		90725-58	96906	70	15
	80194	4	1	907428	73342	104	11
	19207	82		907429	73342	107	1
	19207	82		907445	73342	106	6
01476	73680	12	20	907446	73342	106	2
	00000	25	6	907808	73342	105	1
	00000	25	7		73342	107	12
	19207	82		907819	73342	110	10
	00000	120	46	907835	73342	110	6
	00000	25	8	907856-9	92392	123	9
	00000	25	3	910160-1	92392	77	18
3	01276	92		910224-5	92392	52	5
	92392	3	18	910251-8	92392	123	10
	92392	140		910876-2	92392	90	45
	92392	140					
	92392	85	11	911030-5	92392	1	13
				911041-2	92392	100	
	92392	120	5	911115-4	92392	100	
	92392	120	4	912064-3	92392	75	11
	92392	118	12	912069-2	92392	73	25
	92392	119	12	913168-1	92392	67	17
6	92392	44	17	913177-2	92392	90	21
	73342	115	4		92392	117	11
	92392	80	3	914087-2	92392	120	29
	92392	28	3	915275-5	92392	2	9
	92392	38	3	915399-0	92392	83	21
	92392	46	9	915408-9	92392	23	10
	92392	47	17	916197	92392	8	3
	92392	59	3	916225-6	92392	100	
	92392	68	11	916271-0	92392	73	11
	92392	79	13	916383-3	92392	100	
	92392	81	5	916448-4	92392	1	10
	92392	82	10	917330-3	92392	83	30
	92392	100	7	917340-2	92392	29	18
	92392	57	5	917391-5	92392	120	45
	89926	38	23	917441-8	92392	79	27
	92392	23	9	917443-4	92392	79	33
	92392	24	11	917647-0	92392	114	22
	92392	25	10	917664-5	92392	114	12
	92392	29	14	917665-2	92392	114	21
	92392	29	21	917666-0	92392	15	19
	92392	40	7	917806-2	92392	47	2
	92392	40	29	917809-6	92392	47	3
	92392	42	16	917810-4	92392	40	13
	92392	43	12	917835-1	92392	2	3
	92392	44	21		92392	3	6
	92392	45	7	918245-2	92392	1	17
	92392	49	4	919005-9	92392	45	4
	92392	49	12	919015-8	92392	73	18
	92392	53	5	919226-1	92392	57	11
	92392	54	8	919503-3	92392	120	31
	92392	54	10	919612-2	92392	40	24
	92392	57	8	919982-9	92392	117	6
	92392	64	5	920280-5	92392	45	9
	92392	65	3	920615-2	09367	18	1
	92392	70	11	920651-7	92392	34	11
	92392	73	4	920751-5	92392	4	5
	92392	75	2	921116-0	90940	6	7
	92392	76	18		90940	12	13
	92392	77	12		92392	5	2
	92392	81	15		92392	7	27
	92392	82	5	921117-8	92392	5	22
	92392	100			92392	8	5
3	92392	43	6	921118-6	92392	10	3
	92392	45	2	921140-0	92392	96	11
	92392	56	2	921203-6	92392	6	13
	92392	77	4		92392	8	12
	92392	78	10		92392	99	19
	92392	90	46	921206-9	92392	99	20

CROSS-REFERENCE TO FIGURE AND ITEM NUMBER

ERENCE No.	MFG CODE	FIGURE NO.	ITEM NO.
	92392	99	22
31-5	92392	66	6
49-7	92392	14	16
72-9	92392	40	9
34-4	92392	47	11
27-4	92392	83	8
15-5	90940	77	22
48-0	92392	122	7
19-7	92392	15	18
	92392	15	37
04-0	92392	49	2
46-1	92392	41	23
74-1	92392	6	2
80-6	92392	14	17
67-2	92392	92	2
78-9	92392	9	1
82-1	92392	89	3
87-0	92392	10	9
90-4	92392	132	19
49-6	92392	43	8
63-9	92392	123	4
64-7	92392	5	23
	92392	6	14
	92392	8	1
	92392	43	2
83-7	92392	42	24
	92392	79	23
	92392	99	15
	92392	100	4
03-3	92392	29	17
18-1	92392	5	3
	92392	6	8
	92392	7	1
	92392	12	12
14-8	92392	43	23
09-6	92392	16	8
34-4	92392	66	4
30-8	92392	3	15
78-7	92392	3	16

REFERENCE No.	MFG CODE	FIGURE NO.	ITEM NO.
924195-1	93292	13	13
924645-5	92392	81	10
924686-9	92392	93	4
924719-8	92392	93	13
924729-7	92392	12	17
924738-9	92392	12	9
925010-1	92392	44	9
925011-9	92392	77	30
925015-0	79470	44	1
925031-7	92392	7	8
925329-5	92392	79	26
925451-7	92392	94	5
925465-7	92392	140	
	92392	140	
925486-3	92392	36	11
925784-1	92392	140	
928-27-25857	79780	97	8
528-84-25857	80318	97	2
9409011	24617	104	18
9409018	00000	107	11
9409033	24617	115	8
9409052	00000	115	7
9409231	73342	108	9
9409514	73342	103	6
94123-5	16764	61	1
9414207	73342	104	26
9415235	16764	61	2
	16764	62	22
9417096	16764	61	17
5417501	16764	61	24
9417600	73342	111	11
9420423	24617	62	20
9421427	16764	61	28
954528	73342	104	24
956-04-21664	79780	95	
98X18	45681	17	19
98X36	45681	17	11
981280	80194	20	11
996208-132-3-50	45681	93	2

Official: *Chief of Staff*

VERNE L. BOWERS
Major General, United States Army
The Adjutant General

Distribution:
To be distributed in accordance with DA Form 12-25B. (qty rqr block no. 403) Direct an maintenance requirements for Loaders.

☆ U.S. GOVERNMENT PRINTING OFFICE : 19

Order of the Secretary of the Army:

CREIGHTON W. ABRAMS
General, United States Army
Chief of Staff

icial:

ERNE L. BOWERS
Major General, United States Army
The Adjutant General

tribution:
To be distributed in accordance with DA Form 12-25B. (qty rqr block no. 403) Direct and General Support intenance requirements for Loaders.

☆ U.S. GOVERNMENT PRINTING OFFICE : 1988 O - 201-421 (80173)

[illegible]